HALCON

a product of MVTec

Solution Guide II-A

Image Acquisition



HALCON 21.05 *Progress*

MVTec Software GmbH

Building Vision for Business

The Art of Image Acquisition, Version 21.05.0.0

All rights reserved. No part of this publication may be reproduced, stored in a retrieval system, or transmitted in any form or by any means, electronic, mechanical, photocopying, recording, or otherwise, without prior written permission of the publisher.

Copyright © 2002-2021 by MVTec Software GmbH, München, Germany



Protected by the following patents: US 7,062,093, US 7,239,929, US 7,751,625, US 7,953,290, US 7,953,291, US 8,260,059, US 8,379,014, US 8,830,229. Further patents pending.

Microsoft, Windows, Windows Server 2008/2012/2012 R2/2016, Windows 7/8/8.1/10, Microsoft .NET, Visual C++, and Visual Basic are either trademarks or registered trademarks of Microsoft Corporation.
Linux is a trademark of Linus Torvalds.
macOS and OpenCL are trademarks of Apple Inc.

All other nationally and internationally recognized trademarks and tradenames are hereby recognized.

More information about HALCON can be found at: http://www.halcon.com/

About This Manual

Obviously, the acquisition of images is a task to be solved in all machine vision applications. Unfortunately, this task mainly consists of interacting with special, non-standardized hardware in form of image acquisition devices, i.e., cameras or frame grabber boards. To let you concentrate on the actual machine vision problem, HALCON already provides interfaces performing this interaction for a large number of image acquisition devices (see section 1 on page 7).

Within your HALCON application, the task of image acquisition is thus reduced to a few lines of code, i.e., a few operator calls, as can be seen in section 2 on page 9. What's more, this simplicity is not achieved at the cost of limiting the available functionality: Using HALCON, you can acquire images from various configurations of frame grabbers and cameras (see section 3 on page 11) in different timing modes (see section 5 on page 21).

The example programs that are presented in this Solution Guide can be found in the specified subdirectories of the directory `%HALCONEXAMPLES%`. Note that most programs are preconfigured to work with a certain HALCON acquisition interface; in this case, the name of the program contains the name of the interface. To use the program with another image acquisition device, please adapt the parts which open the connection to the device. More example programs for the different HALCON acquisition interfaces can be found in the subdirectory `hdevelop\Image\Acquisition` of the directory `%HALCONEXAMPLES%`.

Please refer to the Programmer's Guide, chapter 7 on page 49 and chapter 19 on page 119, for information about how to compile and link the C++ and C example programs; among other things, they describe how to use the example makefiles for Unix-like systems which can be found in the subdirectories `c` and `cpp` of the directory `%HALCONEXAMPLES%`. Under Windows, you can use Visual Studio workspaces containing the examples, which can be found in the subdirectory `win` parallel to the source files.

Contents

1 The Philosophy Behind the HALCON Acquisition Interfaces **7**

2 A First Example **9**

3 Connecting to Your Image Acquisition Device **11**
3.1 Opening a Connection to a Specified Configuration . . . 11
3.2 Connecting to Multiple Boards and Cameras . . . 12
3.2.1 Single Camera . . . 13
3.2.2 Multiple Boards . . . 13
3.2.3 Multiple Handles Per Board . . . 13
3.2.4 Port Switching . . . 13
3.2.5 Simultaneous Grabbing (Only For Specific Interfaces) . . . 14
3.3 Requesting Information About the Image Acquisition Interface . . . 14

4 Configuring the Acquisition **17**
4.1 General Parameters . . . 17
4.2 Special Parameters . . . 18
4.3 Fixed vs. Dynamic Parameters . . . 19

5 The Various Modes of Grabbing Images **21**
5.1 Real-Time Image Acquisition . . . 21
5.1.1 Non-Real-Time Grabbing Using grab_image . . . 21
5.1.2 Grabbing Without Delay Using Asynchronously Resettable Cameras . . . 23
5.1.3 Volatile Grabbing . . . 23
5.1.4 Real-Time Grabbing Using grab_image_async . . . 24
5.1.5 Continuous Grabbing . . . 26
5.1.6 Using grab_image_async Together With Asynchronously Resettable Cameras . . . 27
5.1.7 Specifying a Maximum Delay . . . 27
5.2 Using an External Trigger . . . 28
5.2.1 Special Parameters for External Triggers . . . 29
5.3 Acquiring Images From Multiple Cameras . . . 29
5.3.1 Dynamic Port Switching and Asynchronous Grabbing . . . 29
5.3.2 Simultaneous Grabbing . . . 31

6 Miscellaneous **33**
6.1 Acquiring Images From Standardized Image Acquisition Devices . . . 33
6.2 Acquiring Images From Unsupported Image Acquisition Devices . . . 34
6.3 Grabbing Image Arrays and Preprocessed Image Data . . . 35
6.4 Error Handling . . . 35
6.4.1 Error Handling in HDevelop . . . 36
6.4.2 Error Handling Using HALCON/C . . . 37
6.4.3 Error Handling Using HALCON/C++ . . . 37
6.4.4 Error Handling Using HALCON/.NET . . . 38
6.5 Callback Functions . . . 38
6.6 Line Scan Cameras . . . 39

A HALCON Images **43**
A.1 The Philosophy of HALCON Images . . . 43

A.2 Image Tuples (Arrays) . . . 44
A.3 HALCON Operators for Handling Images . . . 44
A.3.1 Creation . . . 44
A.3.2 Channels . . . 44
A.3.3 Domain . . . 44
A.3.4 Access . . . 44
A.3.5 Manipulation . . . 45
A.3.6 Image Tuples . . . 45

B Parameters Describing the Image **47**
B.1 Image Size . . . 47
B.2 Image Data . . . 48

C Object Appearance **49**
C.1 Lighting . . . 49
C.1.1 Reflection Properties of the Object . . . 49
C.1.2 Characteristics of the Light Source . . . 50
C.2 Geometry . . . 52

Index **55**

Chapter 1

The Philosophy Behind the HALCON Acquisition Interfaces

From the point of view of a user developing software for a machine vision application, the acquisition of images is only a prelude to the actual machine vision task. Of course it is important that images are acquired at the correct moment or rate, and that the camera and the frame grabber are configured suitably, but these tasks seem to be elementary, or at least independent of the used image acquisition device.

The reality, however, looks different. Image acquisition devices differ widely regarding the provided functionality, and even if their functionality is similar, the SDKs (*software development kit*) provided by the manufacturers do not follow any standard so far. Therefore, switching to a different image acquisition device probably requires to rewrite the image acquisition part of the application.

HALCON's answer to this problem are its *image acquisition interfaces* (IAI) which are provided to currently more than 50 frame grabbers and hundreds of industrial cameras (analog, Camera Link, USB 2.0, IEEE 1394, and GigE) in form of *dynamically loadable libraries* (Windows: DLLs; macOS: shared libraries). HALCON image acquisition interfaces bridge the gap between the individual image acquisition devices and the HALCON library, which is independent of the used image acquisition device, computer platform, and programming language (see figure 1.1). In other words, they

- provide a standardized interface to the HALCON user in form of 15 HALCON operators, and
- encapsulate details specific to the frame grabber or camera, i.e., the interaction with the SDK provided by the device manufacturer.

Therefore, if you decide to switch to a different image acquisition device, all you need to do is to install the corresponding driver and SDK provided by the manufacturer and to use different parameter values when calling the HALCON operators; the operators themselves stay the same.

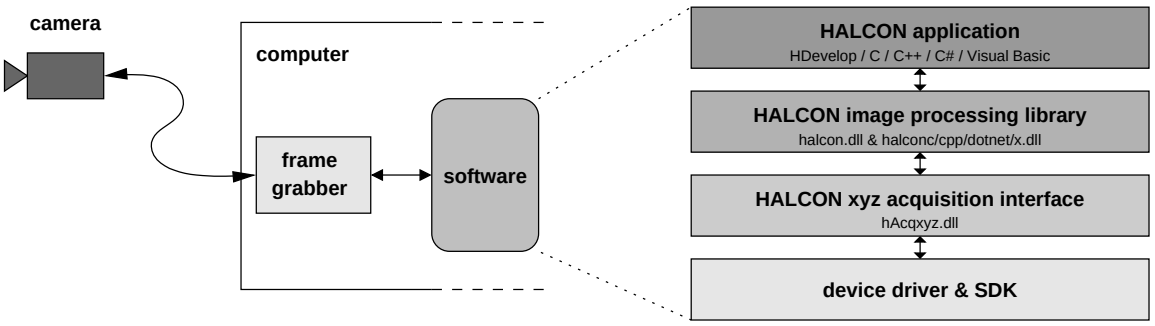

Figure 1.1: From the camera to a HALCON application.

In fact, the elementary tasks of image acquisition are covered by two HALCON operators:

- `open_framegrabber` connects to the image acquisition device and sets general parameters, e.g., the type of the used camera or the port the camera is connected to, then

- grab_image (or grab_image_async, see section 5.1 on page 21 for the difference) grabs images. If not only a single image but an array of images or preprocessed image data like regions or contours have to be grabbed, grab_data or grab_data_async can be used (see also section 6.3 on page 35).

If an image acquisition device provides additional functionality, e.g., on-board modification of the image signal, special grabbing modes, or digital output lines, it is available via the operator set_framegrabber_param (see section 4 on page 17).

Note, that for some image acquisition devices the full functionality is not available within HALCON; please refer to the corresponding online documentation which can be found in the directory %HALCONROOT%\doc\html\manuals or via the HALCON folder in the Windows start menu (if you installed the documentation). The latest information can be found under http://www.mvtec.com/products/interfaces.

If the image acquisition device you want to use is not (yet) supported by HALCON, you can nevertheless use it together with HALCON. Please refer to section 6.2 on page 34 for more details.

Please note that with HALCON 8.0 our terminology has changed: Since digital cameras, which are connected by USB 2.0, IEEE 1394 or GigE, are not really based on an actual frame grabber board, we no longer use the term HALCON frame grabber interface. Instead, we use the term *HALCON acquisition interface*, and the term *image acquisition device* is used as a substitute for either a frame grabber board or a digital camera. For backwards compatibility reasons, the names of the HALCON operators have been unchanged, thus, the operator names open_framegrabber, info_framegrabber, and close_framegrabber may sound a little bit old-fashioned.

Chapter 2

A First Example

In this section we start with a simple image acquisition task, which uses the image acquisition device in its default configuration and the standard grabbing mode. The grabbed images are then segmented. To follow the example actively, start the HDevelop program `%HALCONEXAMPLES%\solution_guide\image_acquisition\first_example_acquisition.hdev`, then press Run once to initialize the application.

Step 1: Connect to the frame grabber

```
open_framegrabber (AcqName, 1, 1, 0, 0, 0, 0, 'default', -1, 'default', -1, \
                   'false', CameraType, myBoard, -1, -1, AcqHandle)
```

When opening the connection to your image acquisition device using the operator `open_framegrabber`, the main parameter is the `Name` of the corresponding HALCON acquisition interface. As a result, you obtain a so-called *handle* (`AcqHandle`), by which you can access the image acquisition device, e.g., in calls to the operator `grab_image`.

In the example, default values are used for most other parameters (`'default'` or `-1`); section 4.1 on page 17 takes a closer look at this topic. How to connect to more complex frame grabber and camera configurations is described in section 3 on page 11.

Step 2: Grab an image

```
grab_image (Image, AcqHandle)
```

After successfully connecting to your image acquisition device you can grab images by calling the operator `grab_image` with the corresponding handle `AcqHandle`. More advanced modes of grabbing images are described in section 5 on page 21.

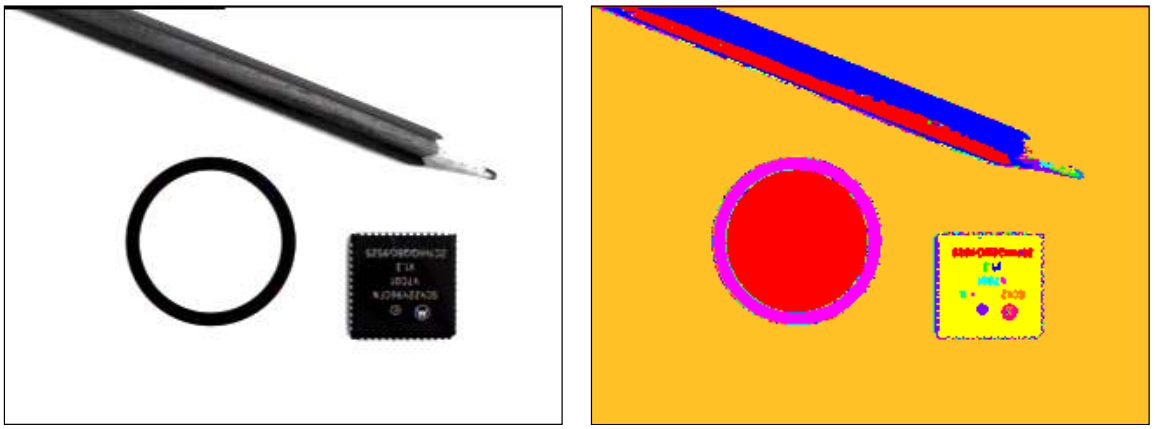

a) b)

Figure 2.1: a) Acquired image; b) processed image (automatic segmentation).

Step 3: Grab and process images in a loop

```
while (Button != 1)
    grab_image (Image, AcqHandle)
    auto_threshold (Image, Regions, 4)
    connection (Regions, ConnectedRegions)
    get_mposition (WindowHandleButton, Row, Column, Button)
endwhile
```

In the example, the grabbed images are then automatically segmented using the operator `auto_threshold` (see figure 2.1). This is done in a loop which can be exited by clicking into a window with the left mouse button.

Chapter 3

Connecting to Your Image Acquisition Device

In this section, we show how to connect to different configurations of frame grabber(s) and camera(s), ranging from the simple case of one camera connected to one frame grabber board to more complex ones, e.g., multiple synchronized cameras connected to one or more boards.

3.1 Opening a Connection to a Specified Configuration

With the operator `open_framegrabber` you open a connection to an image acquisition device. This connection is described by four parameters (see figure 3.1): First, you select an acquisition interface with the parameter `Name`. The parameter `Device` specifies the actual board or camera; depending on the acquisition interface, this parameter can contain a string describing the board or simply a number (in form of a string!).

Often, the camera can be connected to the frame grabber at different ports, whose number can be selected via the parameter `Port` (in rare cases `LineIn`). The parameter `CameraType` describes the connected camera: For analog cameras, this parameter usually specifies the used signal norm, e.g., `'ntsc'`. For digital cameras, this parameter typically specifies the camera model; more complex acquisition interfaces use this parameter to select a camera configuration file.

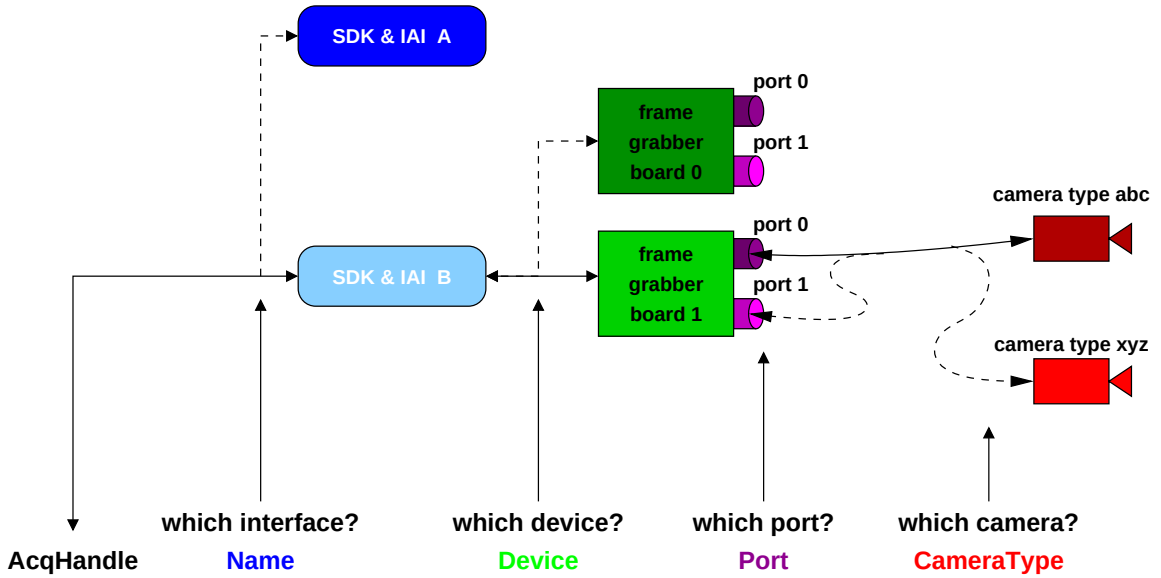

Figure 3.1: Describing a connection with the parameters of `open_framegrabber`.

As a result, `open_framegrabber` returns a *handle* for the opened connection in the parameter `AcqHandle`. Note that if you use HALCON's C++ interface and call the operator via the corresponding classes, e.g., `HFramegrabber` in C++, no handle is returned because the instance of the class itself acts as your handle.

With HDevelop's Image Acquisition Assistant you can easily connect to your image acquisition device and choose suitable parameters (for details see the HDevelop User's Guide, section 7.1 on page 194), which is very useful to setup your vision system (illumination, focus, field of view).

3.2 Connecting to Multiple Boards and Cameras

Most HALCON acquisition interfaces allow to use multiple frame grabber boards and cameras. However, there is more than one way to connect cameras and boards and to access these configurations from within HALCON. Below, we describe the different configurations; please check the online documentation of the HALCON interface for your image acquisition device (see `%HALCONROOT%\doc\html\manuals`, the HALCON folder in the Windows start menu, or `http://www.mvtec.com/products/interfaces`) which configurations it supports.

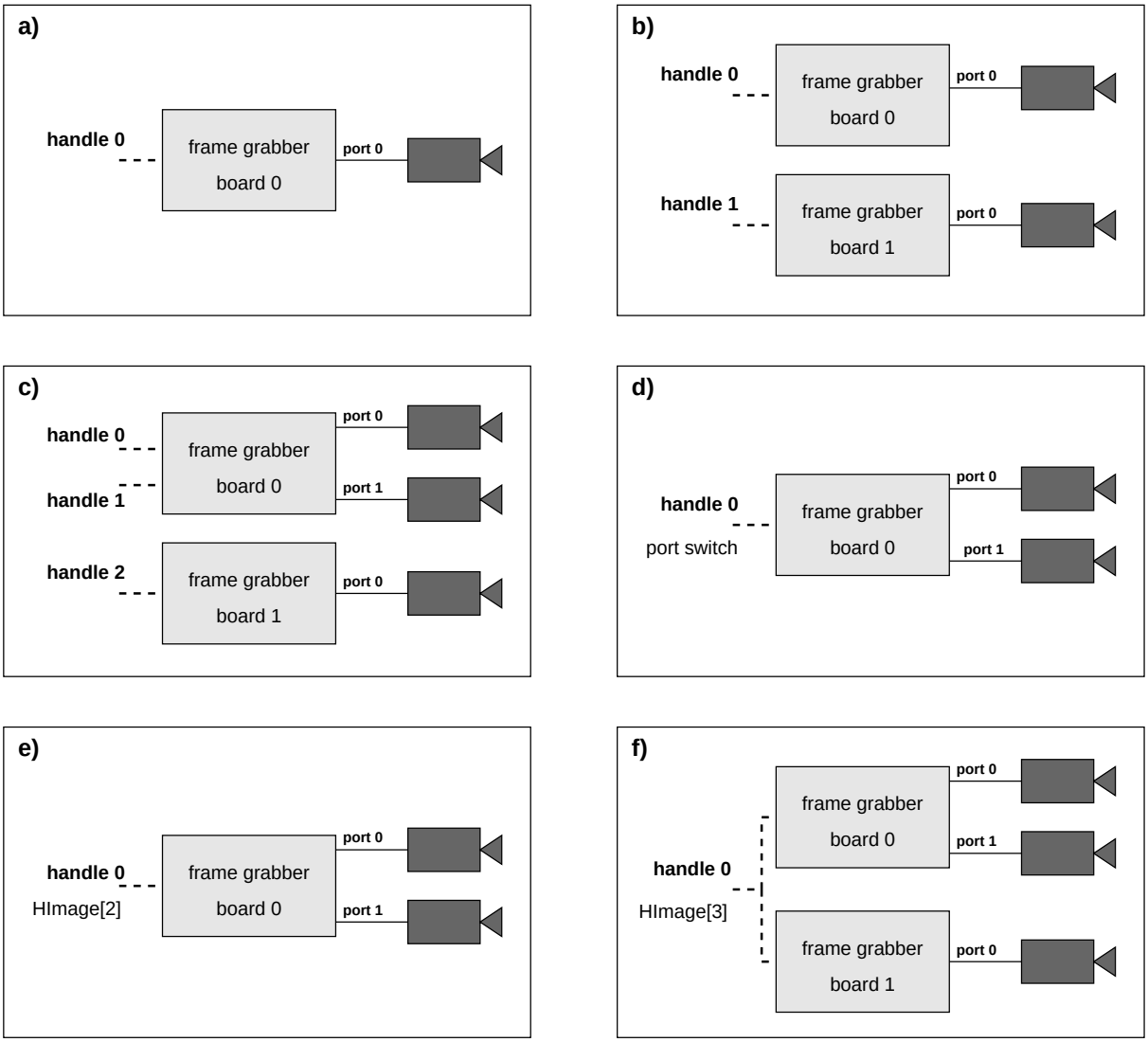

Figure 3.2: a) single board with single camera; b) multiple boards with one camera each; c) multiple boards with one or more cameras; d) single board with multiple cameras and port switching; e) single board with multiple cameras and simultaneous grabbing; f) simultaneous grabbing with multiple boards and cameras.

3.2.1 Single Camera

Figure 3.2a shows the simplest configuration: a single camera connected to a single board, accessible via a single handle. Some frame grabbers, especially digital ones, only support this configuration; as described in the following section, you can nevertheless use multiple cameras with such frame grabbers by connecting each one to an individual board. Note that this configuration is the typical one in case of digital cameras connected by USB 2.0, IEEE 1394, or GigE.

3.2.2 Multiple Boards

Figure 3.2b shows a configuration with multiple cameras, each connected to a separate board. In this case you call the operator `open_framegrabber` once for each connection as in the HDevelop example program `%HALCONEXAMPLES%\solution_guide\image_acquisition\multiple_boards.hdev`.

```
open_framegrabber (AcqName, 1, 1, 0, 0, 0, 0, 'default', -1, 'default', -1, \
                   'default', 'default', Board0, -1, -1, AcqHandle0)
open_framegrabber (AcqName, 1, 1, 0, 0, 0, 0, 'default', -1, 'default', -1, \
                   'default', 'default', Board1, -1, -1, AcqHandle1)
```

In this example, the two calls differ only in the value for the parameter `Device` (`'0'` and `'1'`); of course, you can use different values for other parameters as well, and even connect to different image acquisition interfaces.

To grab images from the two cameras, you simply call the operator `grab_image` once with the two handles returned by the two calls to `open_framegrabber`:

```
grab_image (Image0, AcqHandle0)
grab_image (Image1, AcqHandle1)
```

3.2.3 Multiple Handles Per Board

Many frame grabbers provide multiple input ports and thus allow to connect more than one camera to the board. Depending on the HALCON acquisition interface, this configuration is accessed in different ways which are described in this and the following sections.

The standard HALCON method to connect to the cameras is depicted in figure 3.2c: Each connection gets its own handle, i.e., `open_framegrabber` is called once for each camera with different values for the parameter `Port`, like in the HDevelop example program `%HALCONEXAMPLES%\solution_guide\image_acquisition\multiple_ports.hdev`:

```
open_framegrabber (AcqName, 1, 1, 0, 0, 0, 0, 'default', -1, 'default', -1, \
                   'default', 'default', Board0, Port0, -1, AcqHandle0)
open_framegrabber (AcqName, 1, 1, 0, 0, 0, 0, 'default', -1, 'default', -1, \
                   'default', 'default', Board1, Port1, -1, AcqHandle1)
grab_image (Image0, AcqHandle0)
grab_image (Image1, AcqHandle1)
```

As figure 3.2c shows, you can also use multiple boards with multiple connected cameras.

3.2.4 Port Switching

Some image acquisition interfaces do not access the cameras via multiple handles, but by switching the input port dynamically (see figure 3.2d). Therefore, `open_framegrabber` is called only once, like in the HDevelop example program `%HALCONEXAMPLES%\solution_guide\image_acquisition\port_switching.hdev`:

```
open_framegrabber (AcqName, 1, 1, 0, 0, 0, 0, 'default', -1, 'default', -1, \
                   'default', 'default', 'default', 0, -1, AcqHandle)
```

Between grabbing images you switch ports using the operator set_framegrabber_param (see section 4.2 on page 18 for more information about this operator):

```
set_framegrabber_param (AcqHandle, 'port', Port0)
dev_set_window (WindowHandle0)
grab_image (Image0, AcqHandle)
set_framegrabber_param (AcqHandle, 'port', Port1)
dev_set_window (WindowHandle1)
grab_image (Image1, AcqHandle)
```

Note that port switching only works for compatible (similar) cameras because open_framegrabber is only called once, i.e., the same set of parameters values is used for all cameras. In contrast, when using multiple handles as described above, you can specify different parameter values for the individual cameras (with some board-specific limitations).

3.2.5 Simultaneous Grabbing (Only For Specific Interfaces)

In the configurations described above, images were grabbed from the individual cameras by multiple calls to the operator grab_image. In contrast, some acquisition interfaces allow to grab images from multiple cameras with a single call to grab_image, which then returns a multi-channel image (see figure 3.2e; appendix A.1 on page 43 contains more information about multi-channel images). This mode is called *simultaneous grabbing* (or *parallel grabbing*); like port switching, it only works for compatible (similar) cameras. For example, you can use this mode to grab synchronized images from a stereo camera system. **Note that simultaneous grabbing is available only for very few image acquisition interfaces.**

In this mode, open_framegrabber is called only once, as can be seen in the HDevelop example program %HALCONEXAMPLES%\solution_guide\image_acquisition\simultaneous_grabbing.hdev:

```
open_framegrabber (AcqName, 1, 1, 0, 0, 0, 0, 'default', -1, 'default', -1, \
                   'default', 'default', 'default', 0, -1, AcqHandle)
```

You can check the number of returned images (channels) using the operator count_channels

```
grab_image (SimulImages, AcqHandle)
count_channels (SimulImages, num_channels)
```

and extract the individual images, e.g., using decompose2, decompose3 etc., depending on the number of images:

```
if (num_channels == 2)
    decompose2 (SimulImages, Image0, Image1)
```

Alternatively, you can convert the multi-channel image into an image array using image_to_channels and then select the individual images via select_obj.

Note that some acquisition interfaces allow simultaneous grabbing also for multiple boards (see figure 3.2f). Please refer to section 5.3.2 on page 31 for additional information.

3.3 Requesting Information About the Image Acquisition Interface

As mentioned already, the individual HALCON acquisition interfaces are described in detail on HTML pages which can be found in the directory %HALCONROOT%\doc\html\manuals or in the HALCON folder in the Windows start menu (if you installed the documentation). Another way to access information about an image acquisition interface is to use the operator info_framegrabber.

In the HDevelop example program %HALCONEXAMPLES%\solution_guide\image_acquisition\info_framegrabber.hdev (preconfigured for the HALCON 1394IIDC interface, please adapt the interface name for your own image acquisition device) this operator is called multiple times to query the version number of the interface, the available devices, port numbers, camera types, and the default values for all parameters of

open_framegrabber; the result, i.e., the values displayed in the HDevelop Variable Window, is depicted in figure 3.3.

```
info_framegrabber (AcqName, 'general', GeneralInfo, GeneralValue)
info_framegrabber (AcqName, 'revision', RevisionInfo, RevisionValue)
info_framegrabber (AcqName, 'info_boards', BoardsInfo, BoardsValue)
info_framegrabber (AcqName, 'generic', GenericInfo, GenericValue)
info_framegrabber (AcqName, 'camera_type', CamTypeInfo, CamTypeValue)
info_framegrabber (AcqName, 'defaults', DefaultsInfo, DefaultsValue)
```

The operator info_framegrabber can be called before actually connecting to an image acquisition device with open_framegrabber. The only condition is that the HALCON acquisition interface and the device driver and SDK have been installed.

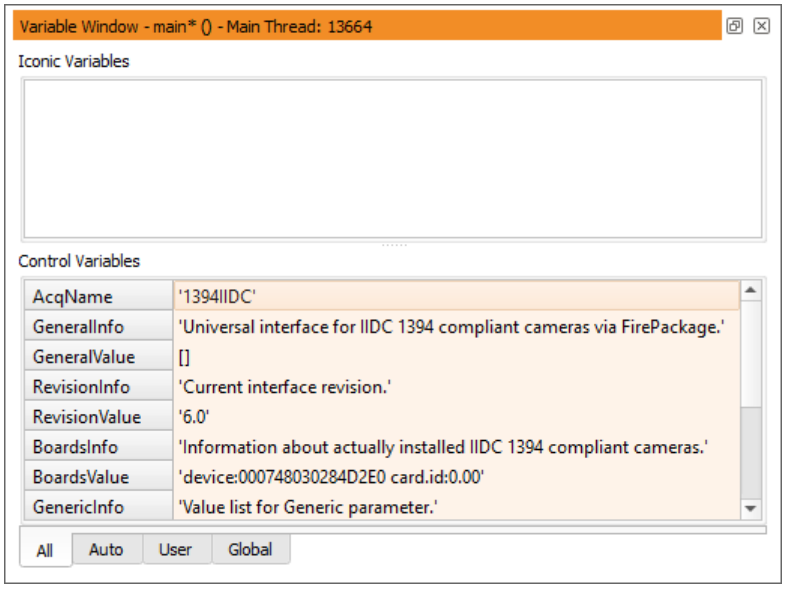

Figure 3.3: An example result of the operator info_framegrabber.

Chapter 4

Configuring the Acquisition

As explained in section 1 on page 7, the intention of HALCON's acquisition interfaces is to provide the user with a common interface for many different image acquisition devices. This interface is kept as simple as possible; as shown, you can connect to your frame grabber or camera and grab a first image using only two operators.

However, HALCON's second goal is to make the full functionality of an image acquisition device available to the user. As image acquisition devices differ widely regarding the provided functionality, this is a difficult task to realize within a simple, common interface. HALCON solves this problem by dividing the task of configuring an image acquisition device connection into two parts: Those parameters which are common to most acquisition interfaces (therefore called *general parameters*) are set when calling the operator `open_framegrabber`. In contrast, the functionality which is not generally available can be configured by setting so-called *special parameters* using the operator `set_framegrabber_param`.

4.1 General Parameters

When opening a connection via `open_framegrabber`, you can specify the following general parameters:

`HorizontalResolution`, `VerticalResolution`	spatial resolution of the transferred image in relation to the original size (see appendix B.1 on page 47)
`ImageWidth`, `ImageHeight`, `StartRow`, `StartColumn`	size and upper left corner of the transferred image in relation to the original size (see appendix B.1 on page 47)
`Field`	grabbing mode for analog cameras, e.g., interlaced-scan, progressive-scan, field grabbing
`BitsPerChannel`, `ColorSpace`	data contained in a pixel (number of bits, number of channels, color encoding, see appendix B.2 on page 48)
`Generic`	generic parameter with device-specific meaning
`ExternalTrigger`	hooking the acquisition of images to an external trigger signal (see also section 5.2 on page 28)
`CameraType`, `Device`, `Port`, `LineIn`	configuration of frame grabber(s) and camera(s) from which images are to be acquired (see section 3.1 on page 11)

In section 3.1 on page 11, we already encountered the parameters describing the frame grabber / camera configuration. Most of the other parameters of `open_framegrabber` specify the image format; they are described in more detail in appendix B on page 47. The parameter `ExternalTrigger` activates a special grabbing mode which is described in detail in section 5.2 on page 28.

Note that when calling `open_framegrabber` you must specify values for all parameters, even if your acquisition interface does not support some of them or uses values specified in a camera configuration file instead. To alleviate this task, the HALCON acquisition interfaces provide suitable default values which are used if you specify `'default'` or `-1` for string or numeric parameters, respectively. The actually used default values can be queried using the operator `info_framegrabber` as shown in section 3.3 on page 14.

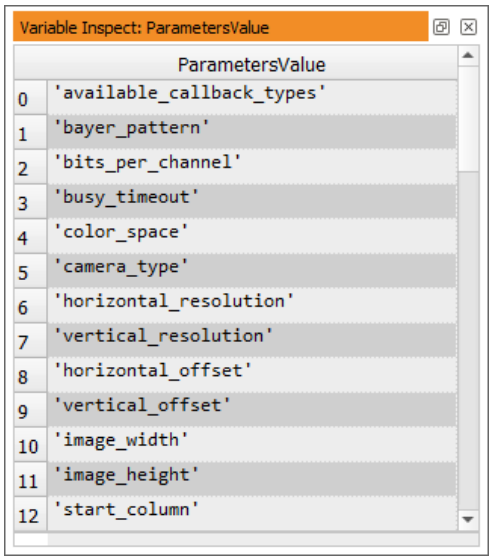

Figure 4.1: Querying available special parameters via `info_framegrabber`.

After connecting to a frame grabber or camera, you can query the current values of general parameters using the operator `get_framegrabber_param`; some interfaces even allow to modify general parameters dynamically. Please refer to section 4.3 on page 19 for more information about these topics.

4.2 Special Parameters

Even the functionality that is not generally available for all image acquisition devices can be accessed and configured with a general mechanism: by setting corresponding special parameters via the operator `set_framegrabber_param`. Typical parameters are, for example:

`'grab_timeout'`	timeout after which the operators `grab_image` and `grab_image_async` stop waiting for an image and return an error (see also section 5.2.1 on page 29 and section 6.4 on page 35)
`'volatile'`	enable volatile grabbing (see also section 5.1.3 on page 23)
`'continuous_grabbing'`	switch on a special acquisition mode which is necessary for some image acquisition devices to achieve real-time performance (see also section 5.1.5 on page 26)
`'trigger_signal'`	signal type used for external triggering, e.g., rising or falling edge
`'image_width'`, `'image_height'`, `'start_row'`, `'start_column'`, `'generic'`, `'external_trigger'`, `'port'`	"duplicates" of some of the general parameters described in section 4.1 on page 17, allowing to modify them dynamically, i.e., after opening the connection (see also section 4.3)

Depending on the acquisition interface, various other parameters may be available, which allow, e.g., to add an offset to the digitized video signal or modify the brightness or contrast, to specify the exposure time or to trigger a flash. Some acquisition interfaces offer special parameters for the use of line scan cameras (see also section 6.6 on page 39), or parameters controlling digital output and input lines.

Which special parameters are provided by an acquisition interface is described in the already mentioned online documentation. You can also query this information by calling the operator `info_framegrabber` as shown below; figure 4.1 depicts the result of double-clicking `ParametersValue` in the Variable Window after executing the line:

```
info_framegrabber (AcqName, 'parameters', ParametersInfo, ParametersValue)
```

To set a parameter, you call the operator set_framegrabber_param, specifying the name of the parameter to set in the parameter Param and the desired value in the parameter Value. For example, in section 3.2.4 on page 13 the following line was used to switch to port 0:

```
    set_framegrabber_param (AcqHandle, 'port', Port0)
```

You can also set multiple parameters at once by specifying tuples for Param and Value as in the following line:

```
set_framegrabber_param (AcqHandle, ['image_width','image_height'], [256, \
                        256])
```

For all parameters which can be set with set_framegrabber_param except those with the prefix 'do_', you can query the current value using the operator get_framegrabber_param. Some interfaces also allow to query additional information like minimum and maximum values for the parameters. In this example, an interface is queried for the minimum and maximum gamma values:

```
get_framegrabber_param (AcqHandle, 'gamma_range', GammaRange)
MinGamma := GammaRange[0]
MaxGamma := GammaRange[1]
```

Thus, you can check a new brightness value against those boundaries before setting it:

```
get_framegrabber_param (AcqHandle, 'gamma', CurrentGamma)
NewGamma := CurrentGamma + 1.0
if (NewGamma > MaxGamma)
    NewGamma := MaxGamma
endif
set_framegrabber_param (AcqHandle, 'gamma', NewGamma)
```


4.3 Fixed vs. Dynamic Parameters

The distinction between fixed and dynamic parameters is made relating to the lifetime of a connection to an image acquisition device. *Fixed parameters*, e.g., the CameraType, are set once when opening the connection with open_framegrabber. In contrast, those parameters which can be modified via set_framegrabber_param during the use of the connection are called *dynamic parameters*.

As already noted in section 4.2 on page 18, some image acquisition interfaces allow to modify general parameters like ImageWidth or ExternalTrigger dynamically via set_framegrabber_param, by providing a corresponding special parameter with the same name but written with small letters and underscores, e.g., 'image_width' or 'external_trigger'.

Independent of whether a general parameter can be modified dynamically, you can query its current value by calling the operator get_framegrabber_param with its "translated" name, i.e., capitals replaced by small letters and underscores as described above.

Chapter 5

The Various Modes of Grabbing Images

Section 2 on page 9 showed that grabbing images is very easy in HALCON – you just call `grab_image`! But of course there's more to image grabbing than just to get an image, e.g., how to assure an exact timing. This section therefore describes more complex grabbing modes.

5.1 Real-Time Image Acquisition

As a technical term, the attribute *real-time* means that a process guarantees that it meets given deadlines. Please keep in mind that **none of the standard operating systems, i.e., neither Windows nor Linux, are real-time operating systems**. This means that the operating system itself does not guarantee that your application will get the necessary processing time before its deadline expires. From the point of view of a machine vision application running under a non-real-time operating system, the most you can do is assure that real-time behavior is not already prevented by the application itself.



In a machine vision application, real-time behavior may be required at multiple points:

Image delay: The camera must "grab" the image, i.e., expose the chip, at the correct moment, i.e., while the part to be inspected is completely visible.

Frame rate: The most common real-time requirement for a machine vision application is to "reach frame rate", i.e., acquire and process all images the camera produces.

Processing delay: The image processing itself must complete in time to allow a reaction to its results, e.g., to remove a faulty part from the conveyor belt. As this point relates only indirectly to the image acquisition it is ignored in the following.

5.1.1 Non-Real-Time Grabbing Using *grab_image*

Figure 5.1 shows the timing diagram for the standard grabbing mode, i.e., if you use the operator `grab_image` from within your application. This operator call is "translated" by the HALCON acquisition interface and the SDK into the corresponding signal to the frame grabber board (marked with *'Grab'*). Obviously, in case of digital cameras connected by USB 2.0, IEEE 1394 or GigE there is no actual frame grabber board; nevertheless, the principles of the various grabbing modes remain the same.

The frame grabber now waits for the next image. In the example, a free-running analog progressive-scan camera is used, which produces images continuously at a fixed frame rate; the start of a new image is indicated by a so-called *vertical sync signal*. The frame grabber then digitizes the incoming analog image signal and transforms it into an image matrix. If a digital camera is used, the camera itself performs the digitizing and transfers a digital signal which is then transformed into an image matrix by the frame grabber.

The image is then transferred from the frame grabber into computer memory via the PCI bus using *DMA* (direct memory access). This transfer can either be *incremental* as depicted in figure 5.1, if the frame grabber has only

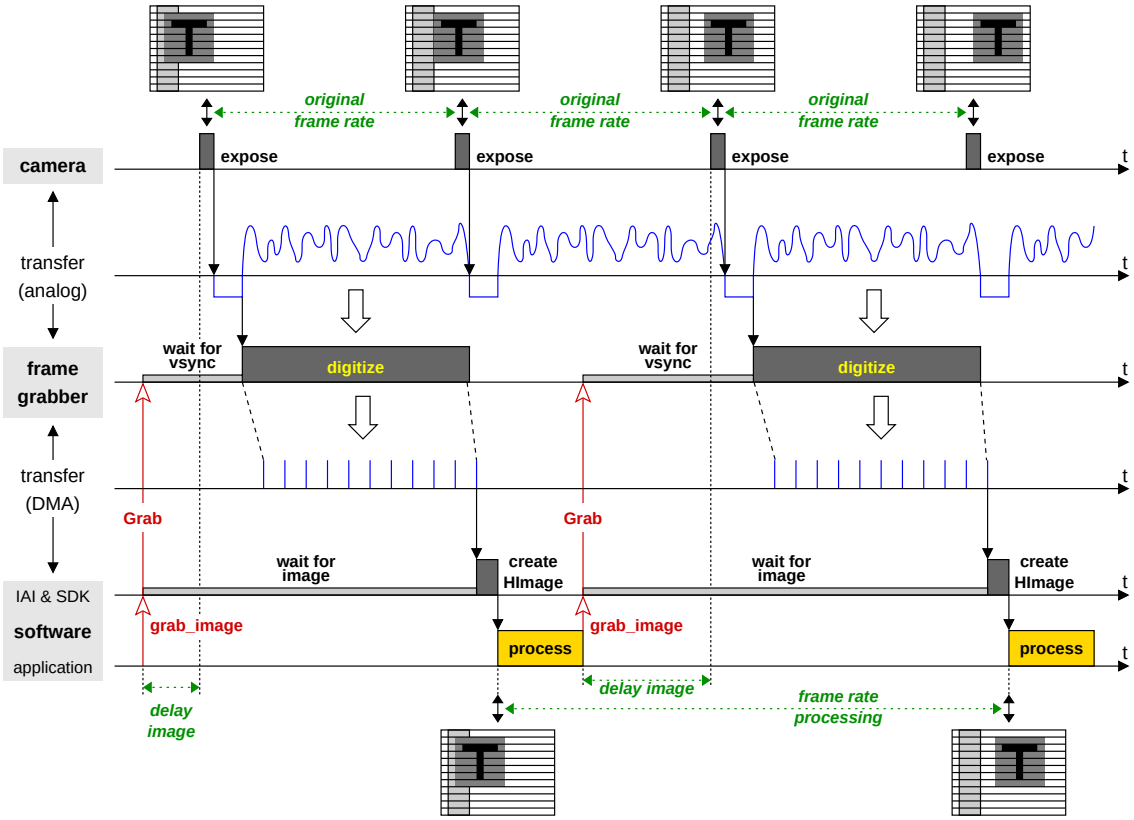

Figure 5.1: Standard timing using `grab_image` (configuration: free-running progressive-scan camera, frame grabber with incremental image transfer).

a FIFO buffer, or in a single burst as depicted in figure 5.2 on page 23, if the frame grabber has a frame buffer on board. The advantage of the incremental transfer is that the transfer is concluded earlier. In contrast, the burst mode is more efficient; furthermore, if the incremental transfer via the PCI bus cannot proceed for some reason, a FIFO overflow results, i.e., image data is lost. Note that in both modes the transfer performance depends on whether the PCI bus is used by other devices as well!

When the image is completely stored in the computer memory, the HALCON acquisition interface transforms it into a HALCON image and returns the control to the application which processes the image and then calls `grab_image` again. However, even if the processing time is short in relation to the frame rate, the camera has already begun to transfer the next image which is therefore "lost"; the application can therefore only process every second image.

You can check this behavior using the HDevelop example program `%HALCONEXAMPLES%\solution_guide\image_acquisition\real_time_grabbing.hdev`, which determines achievable frame rates for grabbing and processing (here: calculating a difference image) first separately and then together as follows:

```
grab_image (BackgroundImage, AcqHandle)
count_seconds (Seconds1)
for i := 1 to 20 by 1
    grab_image (Image, AcqHandle)
    sub_image (BackgroundImage, Image, DifferenceImage, 1, 128)
endfor
count_seconds (Seconds2)
TimeGrabImage := (Seconds2 - Seconds1) / 20
FrameRateGrabImage := 1 / TimeGrabImage
```

To see the non-deterministic image delay, execute the operator `grab_image` in the step mode by pressing `Step`; the execution time displayed in HDevelop's status bar will range between once and twice the original frame period. Please note that on Linux systems, the time measurements are performed with a lower resolution than on Windows systems.

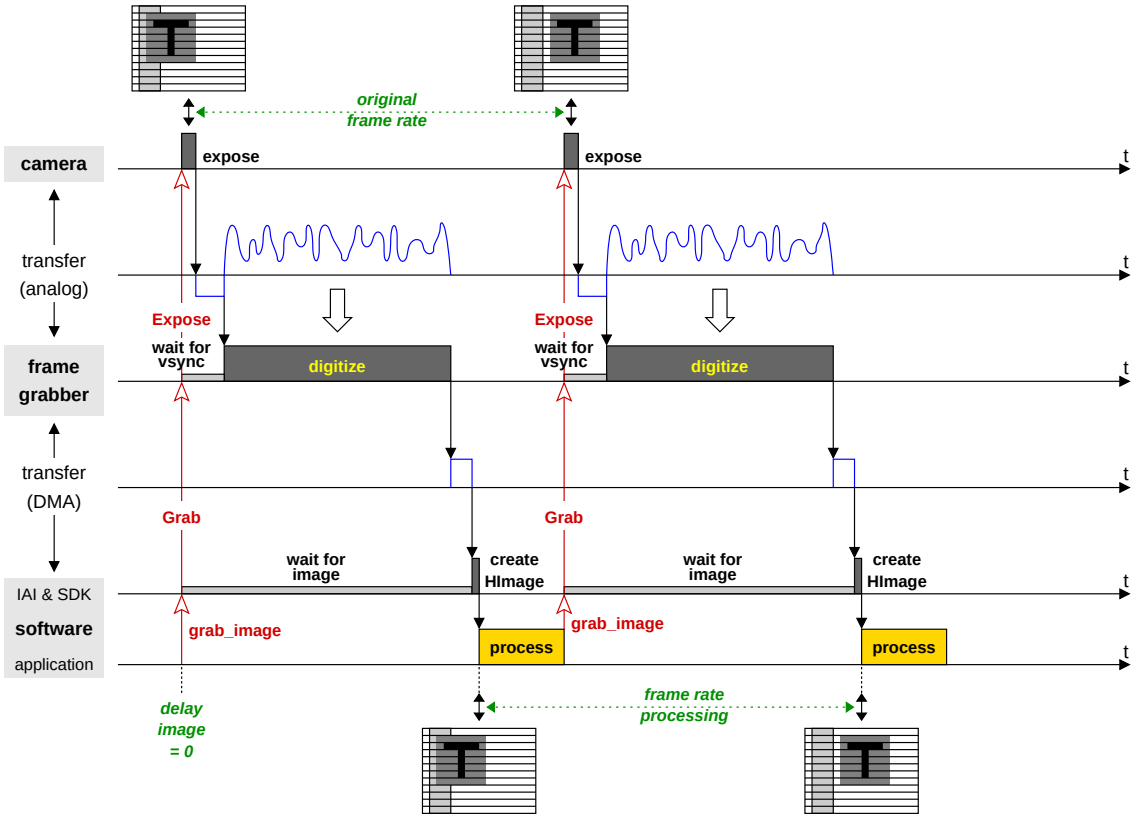

Figure 5.2: Using an asynchronously resettable camera together with `grab_image` (configuration: progressive-scan camera, frame grabber with burst transfer, volatile grabbing).

5.1.2 Grabbing Without Delay Using Asynchronously Resettable Cameras

If you use a free-running camera, the camera itself determines the exact moment an image is acquired (exposed). This leads to a delay between the moment you call `grab_image` and the actual image acquisition (see figure 5.1). The delay is not deterministic, but at least it is limited by the frame rate; for example, if you use an NTSC camera with a frame rate of 30 Hz, the maximum delay can be 33 milliseconds.

Of course, such a delay is not acceptable in an application that is to inspect parts at a high rate. The solution is to use cameras that allow a so-called *asynchronous reset*. This means that upon a signal from the frame grabber, the camera resets the image chip and (almost) immediately starts to expose it. Typically, such a camera does not grab images continuously but only on demand.

An example timing diagram is shown in figure 5.2. In contrast to figure 5.1, the image delay is (almost) zero. Furthermore, because the application now specifies when images are to be grabbed, all images can be processed successfully; however, the achieved frame rate still includes the processing time and therefore may be too low for some machine vision applications.

5.1.3 Volatile Grabbing

As shown in figure 5.1 on page 22, after the image has been transferred into the computer memory, the HALCON acquisition interface needs some time to create a corresponding HALCON image which is then returned in the output parameter `Image` of `grab_image`. Most of this time is needed to copy the image data from the buffer which is the destination of the DMA into a newly allocated area.

You can switch off the copying by using the so-called *volatile grabbing*, which can be enabled via the operator `set_framegrabber_param` (parameter `'volatile'`):

```
set_framegrabber_param (AcqHandle, 'volatile', 'enable')
```

Then, the time needed by the image acquisition interface to create the HALCON image is significantly reduced as visualized in figure 5.2. Note that usually volatile grabbing is only supported for gray value images!

The drawback of volatile grabbing is that grabbed images are overwritten by subsequent grabs. To be more exact, the overwriting depends on the number of image buffers allocated by the acquisition interface or SDK. Typically, at least two buffers exist; therefore, you can safely process an image even if the next image is already being grabbed as in figure 5.4 on page 26. Some acquisition interfaces allow to use more than two buffers, and even to select their number dynamically via `set_framegrabber_param` (parameter `'num_buffers'`).



Please note that **volatile grabbing is not really volatile within HDevelop**, i.e., images are copied nevertheless, otherwise there would be scenarios when HDevelop would crash.

Thus, to experiment with volatile grabbing using the HDevelop example program `%HALCONEXAMPLES%\solution_guide\image_acquisition\volatile_grabbing.hdev`, you must export it to a programming language or use HDevEngine.

After grabbing a first image and displaying it via

```
grab_image (FirstImage, AcqHandle)
dev_open_window (0, 0, Width / 2, Height / 2, 'black', FirstWindow)
dev_display (FirstImage)
```

change the scene and grab a second image which is displayed in an individual window:

```
grab_image (SecondImage, AcqHandle)
dev_open_window (0, Width / 2 + 8, Width / 2, Height / 2, 'black', \
                 SecondWindow)
dev_display (SecondImage)
```

Now, images are grabbed in a loop and displayed in a third window. The two other images are also displayed each time. If you change the scene before each grab you can see how the first two images are overwritten in turn, depending on the number of buffers.

```
dev_open_window (Height / 2 + 66, Width / 4 + 4, Width / 2, Height / 2, \
                 'black', ThirdWindow)
for i := 1 to 10 by 1
    grab_image (CurrentImage, AcqHandle)
    dev_set_window (ThirdWindow)
    dev_display (CurrentImage)
    dev_set_window (FirstWindow)
    dev_display (FirstImage)
    dev_set_window (SecondWindow)
    dev_display (SecondImage)
endfor
```

5.1.4 Real-Time Grabbing Using *grab_image_async*

The main problem with the timing using `grab_image` is that the two processes of image grabbing and image processing run sequentially, i.e., one after the other. This means that the time needed for processing the image is included in the resulting frame rate, with the effect that the frame rate provided by the camera cannot be reached by definition.



This problem can be solved by using the operator `grab_image_async`. Here, the two processes are decoupled and can run asynchronously, i.e., **an image can be processed while the next image is already being grabbed**. Figure 5.3 shows a corresponding timing diagram: The first call to `grab_image_async` is processed similar to `grab_image` (compare figure 5.1 on page 22). The difference becomes apparent after the transfer of the image into computer memory: Almost immediately after receiving the image, the acquisition interface automatically commands the frame grabber to acquire a new image. Thus, the next image is grabbed while the application processes the previous image. After the processing, the application calls `grab_image_async` again, which waits until the already running image acquisition is finished. Thus, the full frame rate is now reached. Note that some frame grabbers fail to reach the full frame rate even with `grab_image_async`; section 5.1.5 on page 26 shows how to solve this problem.

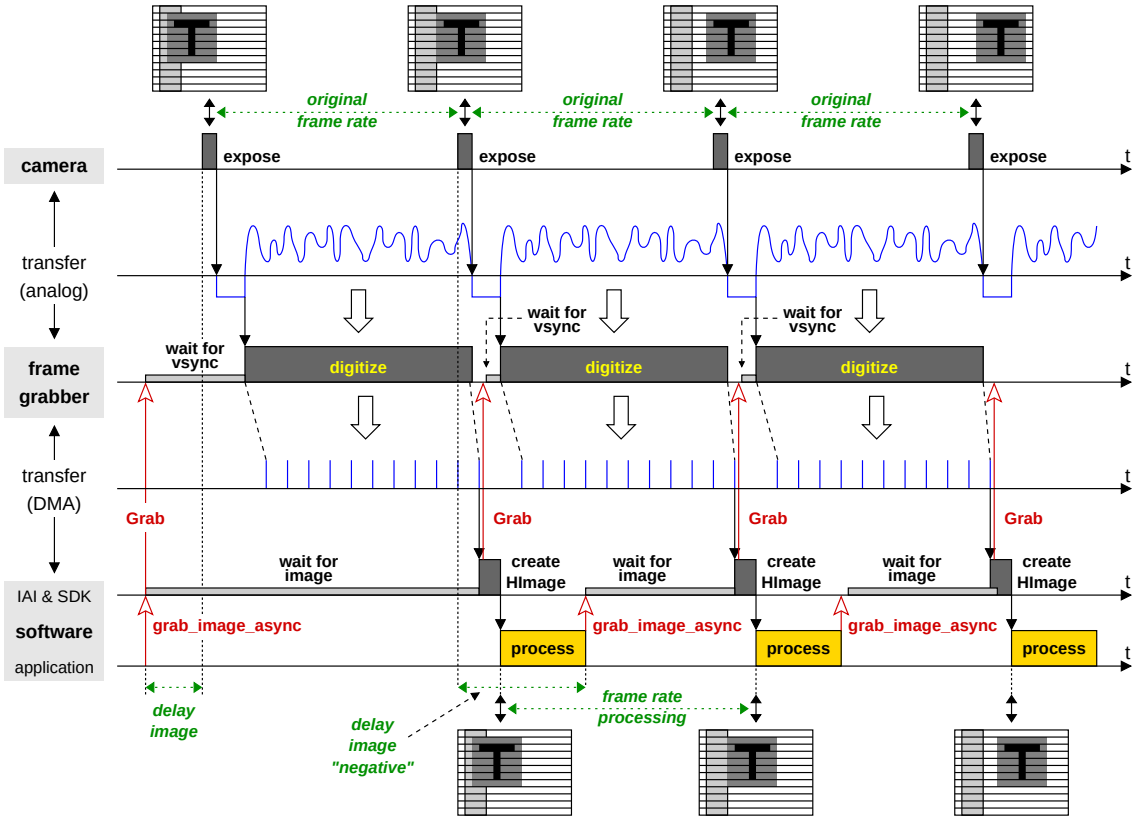

Figure 5.3: Grabbing and processing in parallel using `grab_image_async`.

In the HDevelop example program `%HALCONEXAMPLES%\solution_guide\image_acquisition\real_time_grabbing.hdev`, which was already described in section 5.1.1 on page 21, the reached frame rate for asynchronous processing is determined as follows:

```
grab_image (BackgroundImage, AcqHandle)
count_seconds (Seconds1)
for i := 1 to 20 by 1
    grab_image_async (Image, AcqHandle, -1)
    sub_image (BackgroundImage, Image, DifferenceImage, 1, 128)
endfor
count_seconds (Seconds2)
TimeGrabImageAsync := (Seconds2 - Seconds1) / 20
FrameRateGrabImageAsync := 1 / TimeGrabImageAsync
```

As can be seen in figure 5.3, the first call to `grab_image_async` has a slightly different effect than the following ones, as it also triggers the first grab command to the frame grabber. As an alternative, you can use the operator `grab_image_start` which just triggers the grab command; then, the first call to `grab_image_async` behaves as the other ones. This is visualized, e.g., in figure 5.4; as you can see, the advantage of this method is that the application can perform some processing before calling `grab_image_async`.

Note that you can use `grab_image_start` in combination with the special parameter `'start_async_after_grab_async'` to specify exactly when a grab command is triggered during asynchronous grabbing. In section 5.3.1 on page 29, this is used for asynchronous grabbing with multiple cameras.

In the example, the processing was assumed to be faster than the acquisition. If this is not the case, the image will already be ready when the next call to `grab_image_async` arrives. In this case, you can specify how "old" the image is allowed to be using the parameter `MaxDelay`. Please refer to section 5.1.7 on page 27 for details.

Please note that when using `grab_image_async` it is not obvious anymore which image is returned by the operator call, because the call is decoupled from the command to the frame grabber! In contrast to `grab_image`, which always triggers the acquisition of a new image, `grab_image_async` typically returns an image which has been exposed before the operator was called, i.e., the image delay is negative (see figure 5.3)! Keep this effect in mind

when changing parameters dynamically; contrary to intuition, the change will not affect the image returned by the next call of `grab_image_async` but by the following ones! Another problem appears when switching dynamically between cameras (see section 5.3.1 on page 29).

5.1.5 Continuous Grabbing

For some frame grabbers, `grab_image_async` fails to reach the frame rate because the grab command to the frame grabber comes too late, i.e., after the camera has already started to transfer the next image (see figure 5.4a).

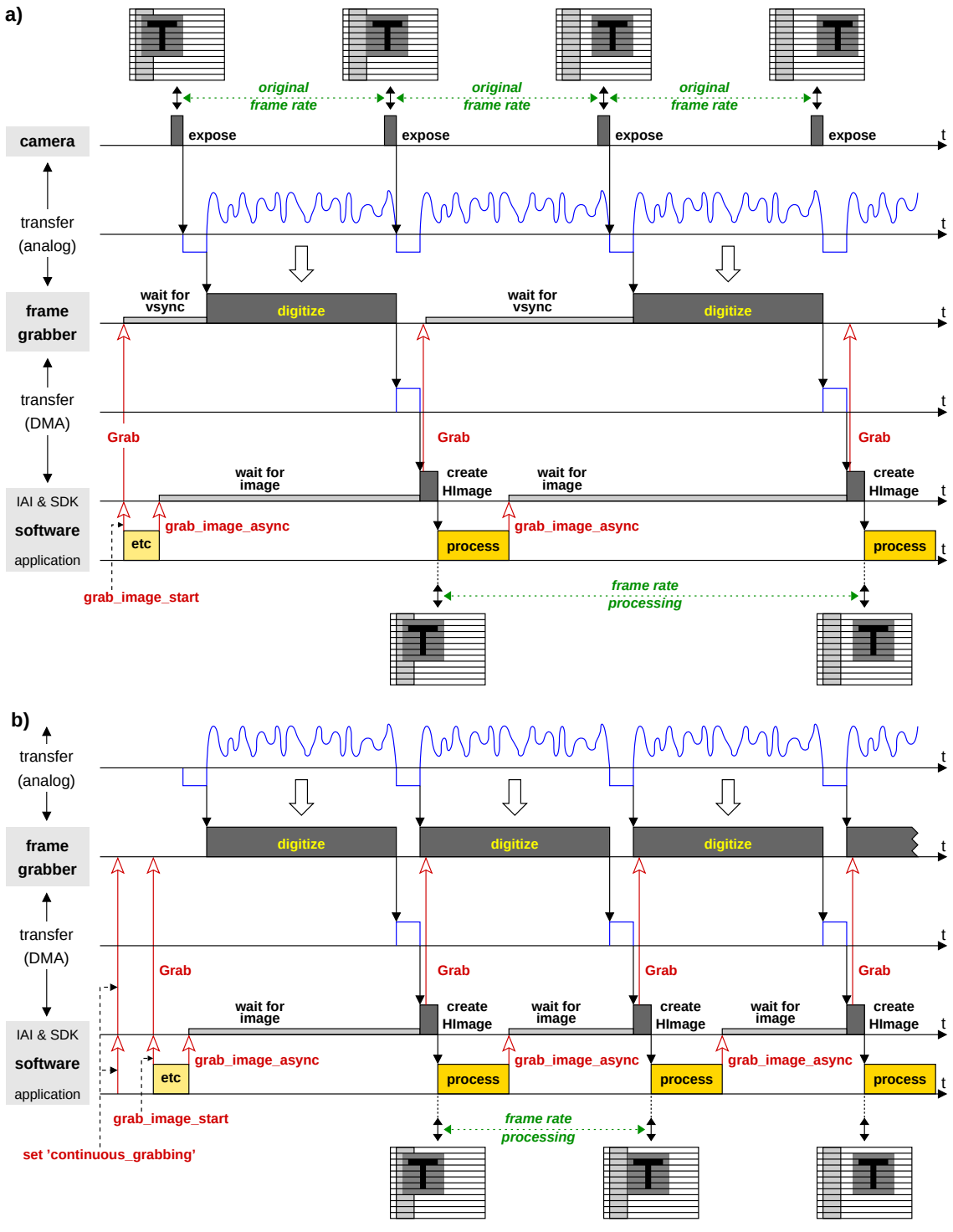

Figure 5.4: a) `grab_image_async` fails to reach frame rate; b) problem solved using continuous grabbing.

As a solution to this problem, some acquisition interfaces provide the so-called *continuous grabbing mode*, which can be enabled only via the operator `set_framegrabber_param` (parameter `'continuous_grabbing'`):

```
set_framegrabber_param (AcqHandle, 'continuous_grabbing', 'enable')
```

In this mode, the frame grabber reads images from a free-running camera continuously and transfers them into computer memory as depicted in figure 5.4b. Thus, the frame rate is reached. If your frame grabber supports continuous grabbing, you can test this effect in the example program `%HALCONEXAMPLES%\solution_guide\image_acquisition\real_time_grabbing.hdev`, which was already described in the previous sections; the program measures the achievable frame rate for `grab_image_async` without and with continuous grabbing.

We recommend to use continuous grabbing only if you want to process every image; otherwise, images are transmitted over the PCI bus unnecessarily, thereby perhaps blocking other PCI transfers.

Note that some acquisition interfaces provide additional functionality in the continuous grabbing mode. Please refer to the corresponding documentation for more information.

5.1.6 Using *grab_image_async* Together With Asynchronously Resettable Cameras

As described in section 5.1.2 on page 23, you can acquire images without delay by using an asynchronously resettable camera. Figure 5.5 shows the resulting timing when using such a camera together with `grab_image_async`. When comparing the diagram to the one in figure 5.2 on page 23, you can see that a higher frame rate can now be reached, because the processing time is not included anymore.

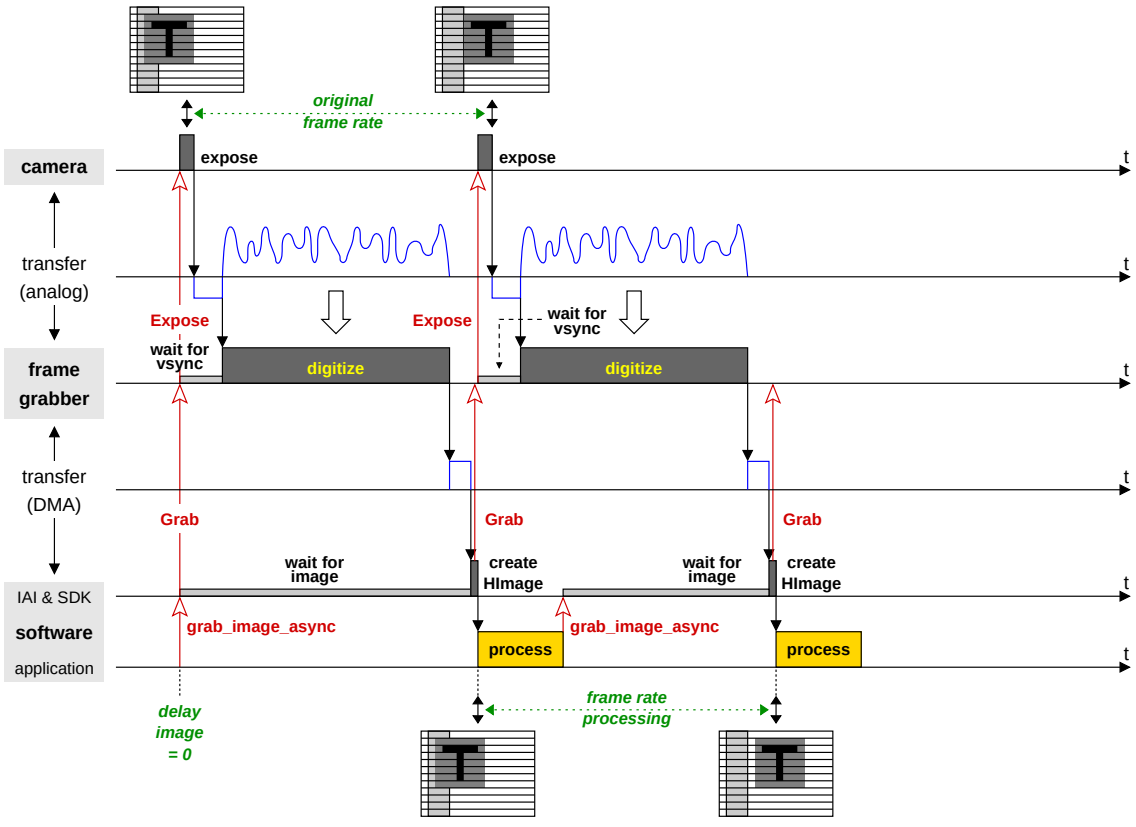

Figure 5.5: Using an asynchronously resettable camera together with `grab_image_async` (configuration as in figure 5.2 on page 23.

5.1.7 Specifying a Maximum Delay

In contrast to `grab_image`, the operator `grab_image_async` has an additional parameter `MaxDelay`, which lets you specify how "old" an already grabbed image may be in order to be accepted. Figure 5.6 visualizes the effect

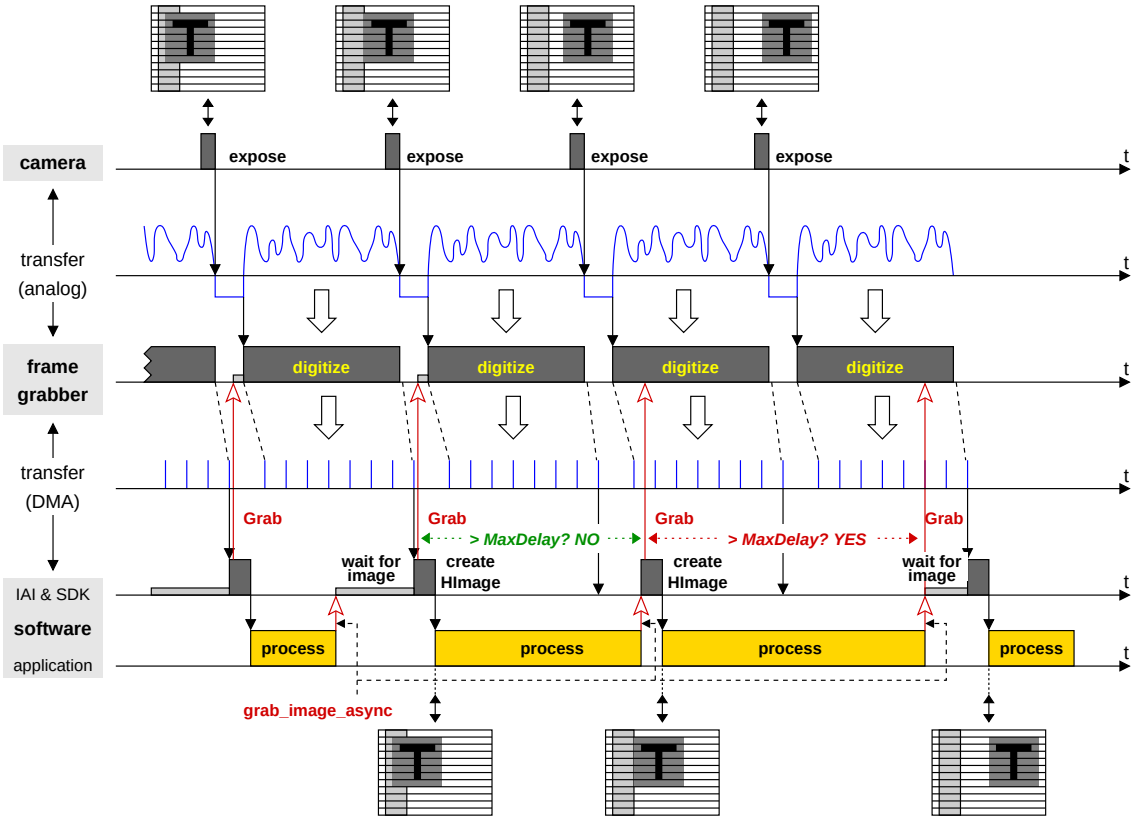

Figure 5.6: Specifying a maximum delay for `grab_image_async` (using continuous grabbing).

of this parameter. There are two cases to distinguish: If the call to `grab_image_async` arrives before the next image has been grabbed (first call in the example), the parameter has no effect. However, if an image has been grabbed already (second and third call in the example), the elapsed time since the last grab command to the frame grabber is compared to `MaxDelay`. If it is smaller (second call in the example), the image is accepted; otherwise (third call), a new image is grabbed.

Please note that the delay is not measured starting from the moment the image is exposed, as you might perhaps expect! Currently, only a few device SDKs provide this information; therefore, the last grab command from the interface to the frame grabber is used as the starting point instead.

Note that the parameter `MaxDelay` in the operator `grab_image_async` has a completely different meaning than the additional parameter `'grab_timeout'`: Using `'grab_timeout'` you can set a timeout for the acquisition process, i.e., the grab operators return after a certain time period with an appropriate error.

5.2 Using an External Trigger

In the previous section, the software performing the machine vision task decided when to acquire an image (*software trigger*). In industrial applications, however, the moment for image acquisition is typically specified externally by the process itself, e.g., in form of a hardware trigger signal indicating the presence of an object to be inspected. Most image acquisition devices are therefore equipped with at least one input line for such signals, which are called *external triggers*.

From HALCON's point of view, external triggers are dealt with by the image acquisition device, the only thing to do is to inform the device to use the trigger. You can do this simply by setting the parameter `ExternalTrigger` of `open_framegrabber` to `'true'`. Some acquisition interfaces also allow to enable or disable the trigger dynamically using the operator `set_framegrabber_param` (parameter `'external_trigger'`).

Figure 5.7a shows the timing diagram when using an external trigger together with `grab_image` and a free-running camera. After the call to `grab_image`, the image acquisition device waits for the trigger signal. When it appears, the procedure described in the previous section follows: The device waits for the next image, digitizes it, and

transfers it into computer memory; then, the HALCON acquisition interface transforms it into a HALCON image and returns the control to the application which processes the image and then calls grab_image again, which causes the image acquisition device to wait for the next trigger signal.

The (bad) example in figure 5.7a was chosen on purpose to show an unsuitable configuration for using an external trigger: First of all, because of the free-running camera there is a non-deterministic delay between the arrival of the trigger signal and the exposure of the image, which may mean that the object to be inspected is not completely visible anymore. Secondly, because grab_image is used, trigger signals which arrive while the application is processing an image are lost.

Both problems can easily be solved by using an asynchronously resettable camera together with the operator grab_image_async as depicted in figure 5.7b.

The C++ example program %HALCONEXAMPLES%\examples\solution_guide\image_acquisition\cpp\error_handling_timeout.cpp shows how simple it is to use an external trigger: The connection is opened with ExternalTrigger set to 'true':

```
HFramegrabber   acqdevice;

acqdevice.OpenFramegrabber(acqname, 1, 1, 0, 0, 0, 0, "default", -1,
                           "gray", -1, "true", "default", "default", -1, -1);
```

Then, images are grabbed:

```
HImage          image;

do
{
  image = acqdevice.GrabImageAsync(-1);
} while (button == 0);
```

The example contains a customized error handler which checks whether there is an external trigger; this part is described in detail in section 6.4.3 on page 37.

5.2.1 Special Parameters for External Triggers

Most image acquisition interfaces allow to further configure the use of external triggering via the operator set_framegrabber_param. As mentioned in section 4.2 on page 18, some interfaces allow to enable and disable the external trigger dynamically via the parameter 'external_trigger'. Another useful parameter is 'grab_timeout', which sets a timeout for the acquisition process (some interfaces provide an additional parameter 'trigger_timeout' just for triggered grabbing). Without such a timeout, the application would hang if for some reason no trigger signal arrives. In contrast, if a timeout is specified, the operators grab_image and grab_image_async only wait the specified time and then return an error code or raise an exception, depending on the programming language used. Section 6.4 on page 35 shows how to handle such errors.

Other parameters allow to further specify the form of the trigger signal ('trigger_signal'), e.g., whether the falling or the rising edge is used as the trigger, select between multiple trigger input lines, or even filter trigger signals. Some acquisition interfaces also allow to influence the exposure via the trigger signal.

5.3 Acquiring Images From Multiple Cameras

The timing diagrams shown in the previous sections depicted the case of a single camera. Below we discuss some issues which arise when acquiring images from multiple cameras (see section 3.2 on page 12 for possible configurations).

5.3.1 Dynamic Port Switching and Asynchronous Grabbing

If you switch dynamically between multiple cameras connected to a single board as described in section 3.2.4 on page 13, you must be careful when using grab_image_async: By default, the acquisition interface commands the

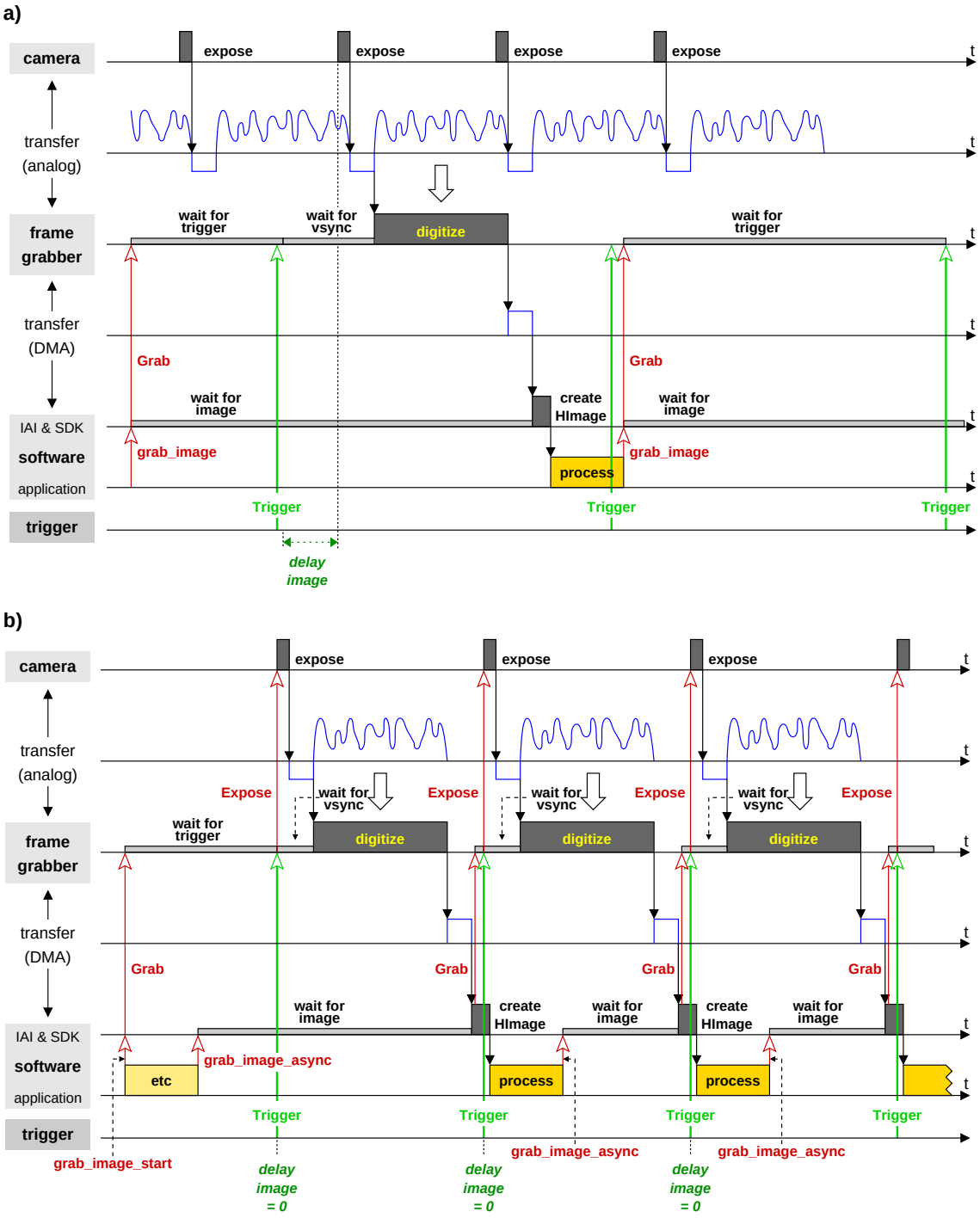

Figure 5.7: Using an external trigger together with: a) free-running camera and `grab_image`; b) asynchronously resettable camera and `grab_image_async`.

frame grabber board to grab the next image automatically after it received the current image — but before the next call of `grab_image_async`! If you switched to another camera before this call, the frame grabber might already be busy grabbing an image from the first camera.

Some acquisition interfaces solve this problem by providing the parameter `'start_async_after_grab_async'` for the operator `set_framegrabber_param` which allows to disable the automatic grab command to the frame grabber board.

```
set_framegrabber_param (AcqHandle, 'start_async_after_grab_async', \
                        'disable')
```

Now, all grab commands must be issued explicitly with the operator grab_image_start. The following code shows how to switch between cameras in a loop:

```
* switch to camera 0 and grab a first image
set_framegrabber_param (AcqHandle, 'port', Port0)
grab_image_start (AcqHandle, -1)
dev_set_window (WindowHandle0)
grab_image_async (Image0, AcqHandle, -1)
dev_display (Image0)
while (1)
    * switch to camera 1 and start a new grab
    set_framegrabber_param (AcqHandle, 'port', Port1)
    grab_image_start (AcqHandle, -1)
    * meanwhile, process image 0
    * then get image from camera 1
    dev_set_window (WindowHandle1)
    grab_image_async (Image1, AcqHandle, -1)
    dev_display (Image1)
    * switch to camera 0 and start a new grab
    set_framegrabber_param (AcqHandle, 'port', Port0)
    grab_image_start (AcqHandle, -1)
    * meanwhile, process image 1
    * then get image from camera 0
    dev_set_window (WindowHandle0)
    grab_image_async (Image0, AcqHandle, -1)
    dev_display (Image0)
endwhile
```

5.3.2 Simultaneous Grabbing

Some image acquisition interfaces provide special functionality to grab images *simultaneously* from multiple (synchronized) cameras. Typically, the cameras are connected to a single frame grabber board; some interfaces also allow to grab simultaneously from cameras connected to multiple boards. As described in section 3.2.5 on page 14, the images are grabbed by a single call to grab_image or grab_image_async, which return them in form of a multi-channel image. Depending on the acquisition interface, it may be necessary to switch on the simultaneous grabbing via the operator set_framegrabber_param.

Please keep in mind that even if a HALCON acquisition interface supports simultaneous grabbing, this might not be true for every frame grabber board the interface supports! In order to grab multiple images simultaneously, a frame grabber board must be equipped with multiple "grabbing units"; for example, an analog frame grabber board must be equipped with multiple A/D converters. Please check this in the documentation of your frame grabber board.

Even if a HALCON acquisition interface does not provide the special simultaneous grabbing mode, you can realize a similar behavior "manually", e.g., by connecting each (asynchronously resettable) camera to a single frame grabber board and then using a common external trigger signal to synchronize the grabbing.

Chapter 6

Miscellaneous

6.1 Acquiring Images From Standardized Image Acquisition Devices

Different committees have developed standards for image acquisition interfaces. HALCON supports several of these standards and provides the corresponding interfaces. In particular the standards GenICam, GigE Vision, Video4Linux, DCAM, DirectFile, DirectShow, and Twain are supported. A standardized image acquisition interface is suitable for different image acquisition devices that do not necessarily have the same set of parameters to adjust during the image acquisition. For some interfaces, e.g, the 1394IIDC interface that follows the DCAM standard, a fixed set of parameters is available and it can be queried for a specific device, which of these parameters are supported by the device. For other interfaces arbitrary parameters are allowed. Such interfaces are called "generic". Examples for generic interfaces are the GenICamTL interface, which follows the GenTL module of the GenICam standard, and the GigEVision interface that follows the GigE Vision standard. As the parameters for a generic interface may be arbitrary, the information about the device-specific parameters is not provided with the description of the interface but must be queried from the device. For example, if the interface follows the GenICam standard, the needed information is available in form of an xml file that is typically stored on the device. When calling `open_framegrabber`, the information is read automatically. The individual parameter names that are available for the specific device can then be queried with the operator `get_framegrabber_param` setting `Param` to `'available_param_names'`. For the returned parameter names further information can be queried. For example, you can query the following parameter values for each parameter name (replace `'name'` by the specific parameter name):

`'name_range'`:	range for the allowed numerical values, in particular, the minimum allowed value, the maximum allowed value, the increment value, and the default value.
`'name_values'`:	available string values.
`'name_description'`:	short description of the parameter, i.e., a kind of a tool tip.

Additionally, parameter values can be queried that are supported only for some interfaces. The following parameter values are very common and are used, e.g., by the GenICamTL and the GigEVision interface:

`'name_access'`:	access type, i.e., information to which degree the parameter can be accessed, i.e., can it only be read or also be written?
`'name_category'`:	information to which thematic category of parameters the parameter belongs.
`'name_visibility'`:	information to which group of users the parameter is helpful, i.e., should a beginner try to adjust it, or is it more suitable for 'experts' or even only for 'gurus'?

The HDevelop example program `%HALCONEXAMPLES%\hdevelop\Image\Acquisition\gigevision_parameters.hdev` shows how to query parameters of a `GigEVision` interface. In particular, after opening the connection to the specific device with `open_framegrabber`, the tuple of available device-specific parameter names is queried using the parameter `'available_param_names'` within `get_framegrabber_param`.

Then, for each of the available parameters, the access type is determined. If the parameter is readable, its value as well as the range for the numerical values or the available string values are queried.

```
open_framegrabber (InterfaceName, 0, 0, 0, 0, 0, 0, 'default', -1, \
                   'default', GenericParam, 'false', 'default', Device, 0, \
                   -1, AcqHandle)
get_framegrabber_param (AcqHandle, 'available_param_names', ParameterValues)
for Index := 0 to |ParameterValues| - 1 by 1
  get_framegrabber_param (AcqHandle, ParameterValues[Index] + '_access', \
                          ParameterAccess)
  * If the parameter is readable, query further information
  get_framegrabber_param (AcqHandle, ParameterValues[Index], ParameterValue)
  * Note that only one out of the two queries for '_range' and '_values'
  * is available for each parameter
  get_framegrabber_param (AcqHandle, ParameterValues[Index] + '_range', \
                          ParameterValuesOut)
  get_framegrabber_param (AcqHandle, ParameterValues[Index] + '_values', \
                          ParameterValuesOut)
endfor
close_framegrabber (AcqHandle)
```

Note that for generic image acquisition interfaces different types of parameters are used: the parameters specific for the image acquisition device, the parameters provided by HALCON, and the parameters provided by the driver. The parameters provided by HALCON are explained with the description of the interface. All other parameters are queried with `get_framegrabber_param` setting `Param` to `'available_param_names'` as is described above.

6.2 Acquiring Images From Unsupported Image Acquisition Devices

If you want to use an image acquisition device that is currently not supported by HALCON, i.e., for which no HALCON interface exists, there exist two principal ways: First, you can create your own HALCON acquisition interface. A description how to create and integrate an image acquisition interface as well as a template source code that can be used as the basis of an integration can be downloaded from MVTec's web server under `http://www.mvtec.com/products/interfaces`.

As a very easy to use alternative, you can pass externally created images, i.e., the raw image matrix, to HALCON using the operators `gen_image1`, `gen_image3`, `gen_image1_extern`, or `gen_image3_extern`, which create a corresponding HALCON image. The main difference between the operators `gen_image1` and `gen_image1_extern` and their variants for three-channel images is that the former copies the image matrix when creating the HALCON image, whereas the latter doesn't, which is useful if you want to realize *volatile grabbing* as described in section 5.1.3 on page 23.

The C example program `%HALCONEXAMPLES%\examples\solution_guide\image_acquisition\c\use_extern_image.c` shows how to use the operator `gen_image1_extern` to pass standard gray value images to HALCON. In this case, the image matrix consists of 8 bit pixels (bytes), which can be represented by the data type `unsigned char`. At the beginning, the program calls a procedure which allocates memory for the images to be "grabbed"; in a real application this corresponds to the image buffer(s) used by the image acquisition device SDK.

```
unsigned char *image_matrix_ptr;
Hlong         width, height;

InitializeBuffer(&image_matrix_ptr, &width, &height);
```

The example program "simulates" the grabbing of images with a procedure which reads images from an image sequence and copies them into the image buffer. Then, the content of the image buffer is transformed into a HALCON image (type `byte`) via `gen_image1_extern`. The parameter `ClearProc` is set to `0` to signal that the program itself takes care of freeing the memory. The created HALCON image is then displayed. The loop can be exited by clicking into the HALCON window with any mouse button.

```
Hobject       image;
long          window_id;

open_window (0, 0, width, height, 0, "visible", "", (Hlong*)&window_id);
while (!ButtonPressed(window_id))
{
  MyGrabImage((const unsigned char **) &image_matrix_ptr);
  gen_image1_extern(&image, "byte", (Hlong)width, (Hlong)height,
                    (long) image_matrix_ptr, (long) 0);

  disp_obj(image, window_id);
}
```

If your image acquisition device supplies images with more than 8 bit pixels, you must adapt both the data type for the image matrix and the type of the created HALCON image (parameter Type of gen_image1_extern). In case of color images HALCON expects the image data in form of three separate image matrices. Correspondingly, you can create a HALCON image by calling the operators gen_image3 or gen_image3_extern with the three pointers to the matrices. Please refer to appendix A on page 43 for more information about HALCON images in general.

6.3 Grabbing Image Arrays and Preprocessed Image Data

The previous sections described in detail how to acquire images using grab_image or grab_image_async. With these operators images can be grabbed and, if an image consists of several channels, the image is grabbed as a multi-channel image (see also appendix A.1 on page 43). For the typical color image, this approach is suited very well, as multi-channel images can be further processed conveniently by many HALCON operators . But sometimes, e.g., if the grabbed data describes 3D data rather than a color image, the images are needed in an array instead of a multi-channel image. Then, you can either grab the image as a multi-channel image, access the individual channels with the operator access_channel, and store the images of the individual channels in an array. Or, which is more comfortable, you can call the operator grab_data or grab_data_async instead. Both operators immediatley return the grabbed images in an array. Furthermore, they provide the possibility to additionally grab preprocessed image data like regions, contours, or control data.

Note that grab_data and grab_data_async are not available for all image acquisition interfaces. Typically, they are supported by those interfaces that acquire 3D data or that allow a preprocessing in the camera or the framegrabber. For example, the HDevelop example program %HALCONEXAMPLES%\hdevelop\Image\Acquisition\swissranger_simple.hdev shows how to use grab_data to access an array of images from a SwissRanger interface that contains amongst others the X, Y, and Z images needed to build a 3D object model.

```
for i := 1 to 100 by 1
    grab_data (ImageData, Region, Contours, AcqHandle, Data)
    count_obj (ImageData, NumImageData)
    select_obj (ImageData, ImageX, 1)
    select_obj (ImageData, ImageY, 2)
    select_obj (ImageData, ImageZ, 3)
    select_obj (ImageData, DistanceImage, 4)
    select_obj (ImageData, AmplitudeImage, 5)
    if (NumImageData > 5)
        select_obj (ImageData, ConfidenceImage, 6)
    endif
endfor
xyz_to_object_model_3d (ImageX, ImageY, ImageZ, ObjectModel3DID)
```

6.4 Error Handling

Just as the HALCON acquisition interfaces encapsulate the communication with an image acquisition device, they also encapsulate occurring errors within the HALCON error handling mechanism. How to catch and react to these

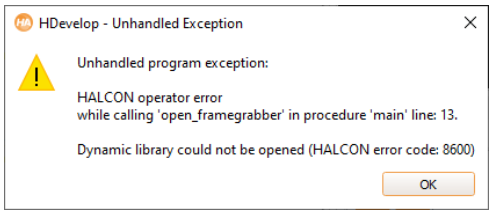

Figure 6.1: Popup dialog in HDevelop signaling a timeout.

errors is described below for HDevelop programs and also for programs using HALCON's programming language interfaces.

Some HALCON acquisition interfaces provide special parameters for `set_framegrabber_param` which are related to error handling. The most commonly used one is the parameter `'grab_timeout'` which specifies when the image acquisition device should quit waiting for an image. The examples described in the following sections show how to handle the corresponding HALCON error.

Note that all example programs enable the signaling of low level errors via the operator `set_system`, e.g., in HDevelop syntax via

```
set_system ('do_low_error', 'true')
```

In this mode, low level errors occurring in the image acquisition device SDK (or in the HALCON acquisition interface) are signaled by a message box.

6.4.1 Error Handling in HDevelop

The HDevelop example `%HALCONEXAMPLES%\solution_guide\image_acquisition\error_handling_timeout.hdev` shows how to handle HALCON errors in an HDevelop program. To "provoke" an error, `open_framegrabber` is called with `ExternalTrigger = 'true'`. If there is no trigger, a call to `grab_image` results in a timeout; HDevelop reacts to this error with the popup dialog shown in figure 6.1 (provided that the display of low level error message boxes is activated via the `Preferences dialog`, otherwise the message is only displayed in the `Output Console` of the `Window menu`) and stops the execution of the program.

```
open_framegrabber (AcqName, 1, 1, 0, 0, 0, 0, 'default', -1, 'default', -1, \
                   'true', 'default', 'default', -1, -1, AcqHandle)
set_framegrabber_param (AcqHandle, 'grab_timeout', 2000)
grab_image (Image, AcqHandle)
```

HALCON lets you modify the reaction to an error with the operator `set_check` (in HDevelop: `dev_set_check`). If you set it to `'~give_error'`, the program does not stop in case of an error but only stores its cause in form of an error code. To access this error code in HDevelop, you must define a corresponding variable using the operator `dev_error_var`. Note that this variable is updated after each operator call; to check the result of a single operator we therefore recommend to switch back to the standard error handling mode directly after the operator call as in the following lines:

```
dev_error_var (ErrorNum, 1)
dev_set_check ('~give_error')
grab_image (Image, AcqHandle)
dev_error_var (ErrorNum, 0)
dev_set_check ('give_error')
```

To check whether a timeout occurred, you compare the error variable with the code signaling a timeout (5322); a list of error codes can be found in the Extension Package Programmer's Manual, appendix A on page 105. In the example, the timeout is handled by disabling the external trigger mode via the operator `set_framegrabber_param` (parameter `'external_trigger'`). Then, the call to `grab_image` is tested again.

```
if (ErrorNum == 5322)
    set_framegrabber_param (AcqHandle, 'external_trigger', 'false')
    dev_error_var (ErrorNum, 1)
    dev_set_check ('~give_error')
    grab_image (Image, AcqHandle)
    dev_error_var (ErrorNum, 0)
    dev_set_check ('give_error')
endif
```

Now, the error variable should contain the value 2 signaling that the operator call succeeded; for this value, HDevelop provides the constant H_MSG_TRUE. If you get another error code, the program accesses the corresponding error text using the operator get_error_text.

```
if (ErrorNum != H_MSG_TRUE)
    get_error_text (ErrorNum, ErrorText)
endif
```

If your image acquisition interface does not provide the parameter 'external_trigger', you can realize a similar behavior by closing the connection and then opening it again with ExternalTrigger set to 'false'.

6.4.2 Error Handling Using HALCON/C

The mechanism for error handling in a program based on HALCON/C is similar to the one in HDevelop; in fact, it is even simpler, because each operator automatically returns its error code. However, if a HALCON error occurs in a C program, the default error handling mode causes the program to abort.

The C example program %HALCONEXAMPLES%\examples\solution_guide\image_acquisition\c\error_handling_timeout.c performs the same task as the HDevelop program in the previous section; if the call to grab_image succeeds, the program grabs and displays images in a loop, which can be exited by clicking into the window. The following lines show how to test whether a timeout occurred:

```
set_check ("~give_error");
error_num = grab_image (&image, acqhandle);
set_check ("give_error");
switch (error_num)
{
case H_ERR_FGTIMEOUT:
```

As you see, in a C program you can use predefined constants for the error codes (see the Extension Package Programmer's Manual, appendix A on page 105, for a list of image acquisition error codes and their corresponding constants).

6.4.3 Error Handling Using HALCON/C++

If your application is based on HALCON/C++, an exception handling mechanism is provided based on the class HException, which is described in the Programmer's Guide, section 5.3 on page 40. Whenever a HALCON error occurs, an instance of this class is created.

The main idea is that you can specify a procedure which is then called automatically with the created instance of HException as a parameter. How to use this mechanism is explained in the C++ example program %HALCONEXAMPLES%\examples\solution_guide\image_acquisition\cpp\error_handling_timeout.cpp, which performs the same task as the examples in the previous sections.

In the example program %HALCONEXAMPLES%\examples\solution_guide\image_acquisition\cpp\error_handling_timeout.cpp, the procedure which is to be called upon error is very simple: It just raises a standard C++ exception with the instance of HException as a parameter.

You react to a timeout with the following lines:

```
try
{
  image = acqdevice.GrabImage();
}
catch (HException &except)
{
  if (except.ErrorCode() == H_ERR_FGTIMEOUT)
  {
    acqdevice.SetFramegrabberParam("external_trigger", "false");
```

As already noted, if your image acquisition interface does not provide the parameter 'external_trigger', you can realize a similar behavior by closing the connection and then opening it again with ExternalTrigger set to 'false':

```
  if (except.err == H_ERR_FGTIMEOUT)
  {
    acqdevice.OpenFramegrabber(acqname, 1, 1, 0, 0, 0, 0, "default",
                               -1, "gray", -1, "false", "default",
                               "default", -1, -1);
```

Note that when calling OpenFramegrabber via the class HFramegrabber as above, the operator checks whether it is called with an already opened connection and automatically closes it before opening it with the new parameters.

6.4.4 Error Handling Using HALCON/.NET

For error handling with HALCON/.NET (e.g., in C# or Visual Basic .NET applications) please refer to the Programmer's Guide, section 11.4 on page 75.

6.5 Callback Functions

With callbacks HALCON applications can be notified of occurrences that are defined by different callback types, e.g., if the exposure has finished or the transfer between camera and computer is complete. **Callbacks are available only for specific image acquisition interfaces or devices and are not available for HDevelop programs but only for the programming languages supported by HALCON!**

In practice, first a user-specific callback function must be written that will be called at the occurrence defined by the specific callback type. Note that the function must be written in the selected programming language, i.e., if you use HALCON/C++, the callback function must be implemented in HALCON/C++, too. The function must provide the following parameters: the handle to the image acquisition device, a pointer to interface-specific context data, and a pointer to user-specific context data. The specific signature is described in detail with the operator set_framegrabber_callback. This operator is then used to register the callback function in HALCON. There, the handle to the image acquisition interface and the pointer to the optional user-specific data must be specified. Additionally, the specific callback type must be set. Note that not all image acquisition interfaces support callbacks and the callback types vary between the interfaces that do support them. To check if callbacks are supported by your interface and to query the specific callback types that are available for it, you can call get_framegrabber_param setting the parameter Param to 'available_callback_types'. With get_framegrabber_callback you can query the callback function and the pointer to the user-specific data set for a specific callback type and image acquisition interface.

When implementing the user-specific callback function, you should take care that its execution time is as short as possible, because, if the execution of the user-specific callback function takes too long, the system will slow down or the occurrence of further user-specific callbacks might be lost. Which case applies depends on the way the interface internally handles the synchronization of the callback process. In particular, the synchronization can be based on internally used callbacks or on a mechanism that uses so-called "events". In the first case, the user-specific callback function is activated by an internally used callback function that waits for the user-specific callback function to finish before the next callback type is processed. This process may slow down the frame rate if the user-specific callback function is very complex. In the second case, the interfaces use "events" instead of an internally used callback function to activate the user-specific callback function. Then, the process does not wait

for the user-specific callback function to finish before it proceeds. Instead, it waits a fixed time after activating the user-specific callback function and then proceeds automatically. This waiting time cannot be controlled by the user and thus, it might happen for very complex user-specific callback functions that by the time an event tries to activate the user-specific callback function, the function is still busy and the event is lost.

6.6 Line Scan Cameras

From the point of view of HALCON there is no difference between area and line scan cameras: Both acquire images of a certain width and height; whether the height is 1, i.e., a single line, or larger does not matter. In fact, in many line scan applications the image acquisition device combines multiple acquired lines to form a so-called *page* which further lessens the difference between the two camera types.

The main problem is therefore whether your frame grabber supports line scan cameras. If yes, you can acquire images from it via HALCON exactly as from an area scan camera. With the parameter `ImageHeight` of the operator `open_framegrabber` you can sometimes specify the height of the page; typically, this information is set in the camera configuration file. Some HALCON acquisition interfaces allow to further configure the acquisition mode via the operator `set_framegrabber_param`.

The images acquired from a line scan camera can then be processed just like images from area scan cameras. However, line scan images often pose an additional problem: The objects to inspect may be spread over multiple images (pages). To solve this problem, HALCON provides special operators: `tile_images` allows to merge images into a larger image, `merge_regions_line_scan` and `merge_cont_line_scan_xld` allow to merge the (intermediate) processing results of subsequent images.

How to use these operators is explained in the HDevelop example program `%HALCONEXAMPLES%\solution_guide\image_acquisition\line_scan.hdev`. The program is based on an image file sequence which is read using the HALCON virtual acquisition interface `File`; the task is to extract paper clips and calculate their orientation. Furthermore, the gray values in a rectangle surrounding each clip are determined.

An important parameter for the merging is over how many images an object can be spread. In the example, a clip can be spread over 4 images:

```
MaxImagesRegions := 4
```

The continuous processing is realized by a simple loop: At each iteration, a new image is grabbed, and the regions forming candidates for the clips are extracted using thresholding.

```
while (1)
    grab_image (Image, AcqHandle)
    threshold (Image, CurrRegions, 0, 80)
```

The current regions are then merged with ones extracted in the previous image using the operator `merge_regions_line_scan`. As a result, two sets of regions are returned: The parameter `CurrMergedRegions` contains the current regions, possibly extended by fitting parts of the previously extracted regions, whereas the parameter `PrevMergedRegions` contains the rest of the previous regions.

```
    merge_regions_line_scan (CurrRegions, PrevRegions, CurrMergedRegions, \
                             PrevMergedRegions, ImageHeight, 'top', \
                             MaxImagesRegions)
    connection (PrevMergedRegions, ClipCandidates)
    select_shape (ClipCandidates, FinishedClips, 'area', 'and', 4500, 7000)
```

The regions in `PrevMergedRegions` are “finished”; from them, the program selects the clips via their area and further processes them later, e.g., determines their position and orientation. The regions in `CurrMergedRegions` are renamed and now form the previous regions for the next iteration.

```
    copy_obj (CurrMergedRegions, PrevRegions, 1, -1)
endwhile
```

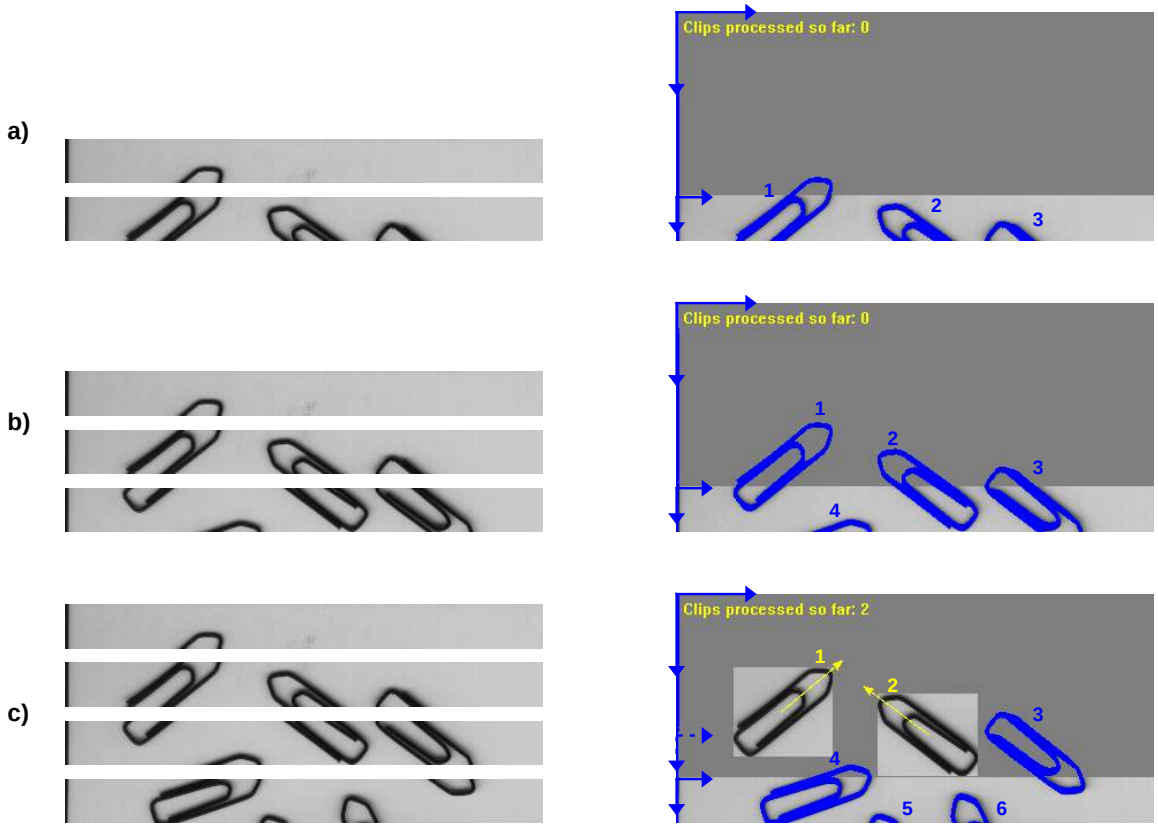

Figure 6.2: Merging regions extracted from subsequent line scan images: state after a) 2, b) 3, c) 4 images (large coordinate system: tiled image; small coordinate systems: current image or most recent image).

Note that the operator `copy_obj` does not copy the regions themselves but only the corresponding HALCON objects, which can be thought of as references to the actual region data.

Before we show how to merge the images let's take a look at figure 6.2, which visualizes the whole process: After the first two images `CurrMergedRegions` contains three clip parts; for the first one a previously extracted region was merged. Note that the regions are described in the coordinate frame of the current image; this means that the merged part of clip no. 1 has negative coordinates.

In the next iteration (figure 6.2b), further clip parts are merged, but no clip is finished yet. Note that the coordinate frame is again fixed to the current image; as a consequence the currently merged regions seem to move into negative coordinates.

After the fourth image (figure 6.2c), clips no. 1 and 2 are completed; they are returned in the parameter `PrevMergedRegions`. Note that they are still described in the coordinate frame of the previous image (depicted with dashed arrow); to visualize them together with `CurrMergedRegions` they must be moved to the coordinate system of the current image using the operator `move_region`:

```
move_region (FinishedClips, ClipsInCurrentImageCoordinates, \
             -ImageHeight, 0)
```

Let's get back to the task of merging images: To access the gray values around a clip, one must merge those images over which the `PrevMergedRegions` can be spread. At the beginning, an empty image is created which can hold 4 images:

```
gen_image_const (TiledImage, 'byte', ImageWidth, \
                 ImageHeight * MaxImagesRegions)
```

At the end of each iteration, the "oldest" image, i.e., the image at the top, is cut off the tiled image using `crop_part`, and the current image is merged at the bottom using `tile_images_offset`:

```
crop_part (TiledImage, TiledImageMinusOldest, ImageHeight, 0, \
           ImageWidth, (MaxImagesRegions - 1) * ImageHeight)
concat_obj (TiledImageMinusOldest, Image, ImagesToTile)
tile_images_offset (ImagesToTile, TiledImage, [0, \
                    (MaxImagesRegions - 1) * ImageHeight], [0,0], [-1, \
                    -1], [-1,-1], [-1,-1], [-1,-1], ImageWidth, \
                     MaxImagesRegions * ImageHeight)
```

As noted above, the regions returned in PrevMergedRegions are described in the coordinate frame of the most recent image (depicted with dashed arrows in figure 6.2c); to extract the corresponding gray values from the tiled image, they must first be moved to its coordinate system (depicted with longer arrows) using the operator move_region. Then, the surrounding rectangles are created using shape_trans, and finally the corresponding gray values are extracted using add_channels:

```
move_region (FinishedClips, ClipsInTiledImageCoordinates, \
             (MaxImagesRegions - 1) * ImageHeight, 0)
shape_trans (ClipsInTiledImageCoordinates, AroundClips, 'rectangle1')
add_channels (AroundClips, TiledImage, GrayValuesAroundClips)
```

Appendix A

HALCON Images

In the following, we take a closer look at the way HALCON represents and handles images. Of course, we won't bother you with details about the low-level representation and the memory management; HALCON takes care of it in a way to guarantee optimal performance.

A.1 The Philosophy of HALCON Images

There are three important concepts behind HALCON's image objects:

1. **Multiple channels**

   Typically, one thinks of an image as a matrix of pixels. In HALCON, this matrix is called a *channel*, and images may consist of one or more such channels. For example, gray value images consist of a single channel, color images of three channels.

   The advantage of this representation is that many HALCON operators automatically process all channels at once; for example, if you want to subtract gray level or color images from another, you can apply `sub_image` without worrying about the image type. Whether an operator processes all channels at once can be seen in the parameter description in the reference manual: If an image parameter is described as `(multichannel-)image` or `(multichannel-)image(-array)` (e.g., the parameter `ImageMinuend` of `sub_image`), all channels are processed; if it is described as `image` or `image(-array)` (e.g., the parameter `Image` of `threshold`), only the first channel is processed.

   For more information about channels please refer to appendix A.3.2.

2. **Various pixel types**

   Besides the standard 8 bit (type `byte`) used to represent gray value image, HALCON allows images to contain various other data, e.g. 16 bit integers (type `int2` or `uint2`) or 32 bit floating point numbers (type `real`) to represent derivatives.

   Most of the time you need not worry about pixel types, because HALCON operators that output images automatically use a suitable pixel type. For example, the operator `derivate_gauss` creates a `real` image to store the result of the derivation. As another example, if you connect to an image acquisition device selecting a value > 8 for the parameter `BitsPerChannel`, a subsequent `grab_image` returns an `uint2` image.

3. **Arbitrarily-shaped region of interest**

   Besides the pixel information, each HALCON image also stores its so-called *domain* in form of a HALCON region. The domain can be interpreted as a region of interest, i.e., HALCON operators (with some exceptions) restrict their processing to this region.

   The image domain inherits the full flexibility of a HALCON region, i.e., it can be of arbitrary shape and size, can have holes, or even consist of unconnected points. For more information about domains please refer to appendix A.3.3.

The power of HALCON's approach lies in the fact that it offers full flexibility but does not require you to worry about options you don't need at the moment. For example, if all you do is grab and process standard 8 bit gray value images, you can ignore channels and pixel types. At the moment you decide to use color images instead, all

you need to do is to add some lines to decompose the image into its channels. And if your camera / frame grabber provides images with more than 8 bit pixel information, HALCON is ready for this as well.

A.2 Image Tuples (Arrays)

Another powerful mechanism of HALCON is the so-called *tuple processing*: If you want to process multiple images in the same way, e.g., to smooth them, you can call the operator (e.g., `mean_image`) once passing all images as a tuple (array), instead of calling it multiple times. Furthermore, some operators always return image tuples, e.g., `gen_gauss_pyramid` or `inspect_shape_model`.

Whether an operator supports tuple processing can be seen in the parameter description in the reference manual: If an input image parameter is described as `image(-array)` or `(multichannel-)image(-array)` (e.g., the parameter `Image` of `mean_image`), it supports tuple processing; if it is described as `image` or `(multichannel-)image` (e.g., the parameter `Image` of `find_bar_code`), only one image is processed.

For information about creating or accessing image tuples please refer to appendix A.3.6.

A.3 HALCON Operators for Handling Images

Below you find a brief overview of operators that allow to create HALCON images or to modify "technical aspects" like the image size or the number of channels.

A.3.1 Creation

HALCON images are created automatically when you use operators like `grab_image` or `read_image`. You can also create images from scratch using the operators listed in the HDevelop menu `Operators` ▷ `Image` ▷ `Creation`, e.g., `gen_image_const` or `gen_image1_extern` (see also section 6.2 on page 34).

A.3.2 Channels

Operators for manipulating channels can be found in the HDevelop menu `Operators` ▷ `Image` ▷ `Channel`. You can query the number of channels of an image with the operator `count_channels`. Channels can be accessed using `access_channel` (which extracts a specified channel without copying), `image_to_channels` (which converts a multi-channel image into an image tuple), or `decompose2` etc. (which converts a multi-channel image into 2 or more single-channel images). Vice versa, you can create a multi-channel image using `channels_to_image` or `compose2` etc., and add channels to an image using `append_channel`.

A.3.3 Domain

Operators for manipulating the domain of an image can be found in the HDevelop menu `Operators` ▷ `Image` ▷ `Domain`. Upon creation of an image, its domain is set to the full image size. You can set it to a specified region using `change_domain`. In contrast, the operator `reduce_domain` takes the original domain into account; the new domain is equal to the intersection of the original domain with the specified region. Please also take a look at the operator `add_channels`, which can be seen as complementary to `reduce_domain`.

A.3.4 Access

Operators for accessing information about a HALCON image can be found in the HDevelop menu `Operators` ▷ `Image` ▷ `Access`. For example, `get_image_pointer1` returns the size of an image and a pointer to the image matrix of its first channel.

A.3.5 Manipulation

You can change the size of an image using the operators change_format or crop_part, or other operators from the HDevelop menu Operators ▷ Image ▷ Format. The menu Operators ▷ Image ▷ Type-Conversion lists operators which change the pixel type, e.g., convert_image_type. Operators to modify the pixel values, can be found in the menu Operators ▷ Image ▷ Manipulation, e.g., paint_gray, which copies pixels from one image into another.

A.3.6 Image Tuples

Operators for creating and accessing image tuples can be found in the HDevelop menu Operators ▷ Object ▷ Manipulation. Image tuples can be created using the operators gen_empty_obj and concat_obj, while the operator select_obj allows to access an individual image that is part of a tuple.

Appendix B

Parameters Describing the Image

When opening a connection with open_framegrabber, you can specify the desired image format, e.g., its size or the number of bits per pixel, using its nine parameters, which are described in the following.

B.1 Image Size

The following 6 parameters influence the size of the grabbed images: HorizontalResolution and VerticalResolution specify the *spatial resolution* of the image in relation to the original size. For example, if you choose VerticalResolution = 2, you get an image with half the height of the original as depicted in figure B.1b. Another name for this process is (vertical and horizontal) *subsampling*.

With the parameters ImageWidth, ImageHeight, StartRow, and StartColumn you can grab only a part of the (possibly subsampled) image; this is called *image cropping*. In figure B.1, the image part to be grabbed is marked with a rectangle in the original (or subsampled) image; to the right, the resulting image is depicted. Note that the resulting HALCON image always starts with the coordinates (0,0), i.e., the information contained in the parameters StartRow and StartColumn cannot be recovered from the resulting image.

Depending on the involved components, both subsampling and image cropping may be executed at different points during the transfer of an image from the camera into HALCON: in the camera, in the frame grabber, or in the software. Image cropping in the camera or in the framegrabber is also called hardware cropping, whereas image cropping on the software side is called software cropping. Please note that subsampling and image cropping do not necessarily have a direct effect on the performance in form of a higher frame rate. In particular, for analog

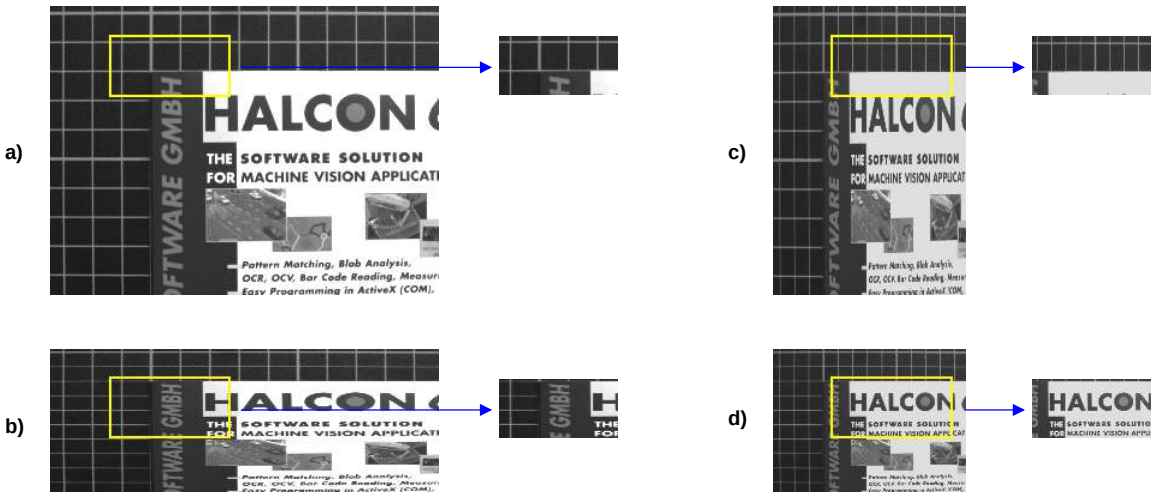

Figure B.1: The effect of image resolution (subsampling) and image cropping (ImageWidth = 200, ImageHeight = 100, StartRow = 50, StartColumn = 100): a) HorizontalResolution (HR) = VerticalResolution (VR) = 1; b) HR = 1, VR = 2; c) HR = 2, VR = 1; d) HR = VR = 2.

cameras the frame rate is in most cases not affected. In contrast, for digital cameras, e.g., hardware cropping often leads to a faster transfer and a higher frame rate. Subsampling or cropping on the software side has no effect on the frame rate; besides, you can achieve a similar result using `reduce_domain`. If the frame grabber executes the subsampling or cropping you may get a positive effect if the PCI bus is the bottleneck of your application and prevents you from getting the full frame rate. Some acquisition interfaces allow *dynamic image cropping* via the operator `set_framegrabber_param`.

Note that HALCON itself does not differentiate between area and line scan cameras as both produce images – the former in form of frames, the latter in form of so-called *pages* created from successive lines (number specified in the parameter `ImageHeight`). Section 6.6 on page 39 contains additional information regarding the use of line scan cameras.

B.2 Image Data

The parameters described in the previous sections concentrated on the size of the images. The *image data*, i.e., the data contained in a pixel, is described with the parameters `BitsPerChannel` and `ColorSpace`. To understand these parameters, a quick look at HALCON's way to represent images is necessary: A HALCON image consists of one or more matrices of pixels, which are called *channels*. Gray value images are represented as single-channel images, while color images consist of three channels, e.g., for the red, green, and blue part of an RGB image. Each image matrix (channel) consists of *pixels*, which may be of different data types, e.g., standard 8 bit (type `byte`) or 16 bit integers (type `int2` or `uint2`) or 32 bit floating point numbers (type `real`). For detailed information about HALCON images please refer to appendix A on page 43.

The two parameters correspond to the two main aspects of HALCON images: With the parameter `ColorSpace`, you can select whether the resulting HALCON image is to be a (single-channel) gray value image (value `'gray'`) or a (multi-channel) color image (e.g., value `'rgb'`). The parameter `BitsPerChannel` specifies how many bits are *transmitted* per pixel per channel from the frame grabber to the computer; the pixel type of the HALCON image is then chosen to accommodate the transmitted number of pixels.

For example, if a frame grabber is able to transmit 10 bit gray value images, select `ColorSpace` = `'gray'` and `BitsPerChannel` = `10` and you will get a single-channel HALCON image of the type `'uint2'`, i.e., 16 bit per channel. Another example concerns RGB images: Some frame grabbers allow the values `8` and `5` for `BitsPerChannel`. In the first case, $3 \times 8 = 24$ bit are transmitted per pixel, while in the second case only $3 \times 5 = 15$ (padded to 16) bit are transmitted; in both cases, a three-channel `'byte'` image results.

Appendix C

Object Appearance

The previous chapters showed you how to acquire images. This appendix looks at the step that precedes the image acquisition, i.e., it provides you with hints how to setup your vision system so that the acquired images contain useful and correct information. For a correct measurement result the different components involved in the process of taking images have to be considered. These are first of all the object of interest, the light that makes the object visible, the camera, which stores the spatially assigned intensities of incoming light, and the geometrical relation between the camera and the object of interest. Further, the individual components consist of different single components, e.g., the camera comprises a lens and a CCD chip. All the involved components yield sources for errors, e.g., caused by lens distortions or the digitalization process.

For all machine vision tasks and especially for highly accurate measuring you should be aware of the error sources that are attached to your specific equipment and of their influence on the appearance of the objects of interest in the image. A correct image analysis is only possible if the features of interest are clearly visible and for many tasks also geometrically correct. Thus, we here discuss the

- lighting conditions (appendix C.1), which control the visibility of the object, and
- the geometrical relations between camera and object (appendix C.2), which influence the geometrical appearance of the objects in the image and control the further processing of the image.

C.1 Lighting

The success of an image analysis task, especially for highly accurate measuring purposes depends on the visibility of the objects of interest in the image. To obtain images with clearly visible objects, the lighting conditions during image acquisition have to be considered carefully. Dependent on the surface of the object and the direction of the light, some parts of the object may reflect more light than others so that the image does not necessarily map the actual object outlines but also reflections and shadows. With bad lighting conditions, too sparse or too much light is received by the camera, which leads to low contrasts at the object borders at least in parts of the image. The task to acquire images that represent the objects of interest as clear edges or homogeneous regions is rather demanding and involves a certain part of intuition. This section summarizes some basic knowledge about lighting and tries to convey to you a feeling for choosing the right lighting conditions for your specific task. In detail, it goes deeper into

- the reflection properties of the object and
- the characteristics of the light source.

C.1.1 Reflection Properties of the Object

Before selecting a specific light source, the specific characteristics of the objects that are to be inspected have to be considered. Dependent on an object's surface light is differently reflected. We differentiate two extreme reflection behaviors:

- specular reflection and
- diffuse reflection.

With specular reflection a ray of light is reflected with almost full intensity into a single direction (see figure C.1, left). Specular reflection is dominant for objects with a low surface roughness like a mirror or plain steel.

With diffuse reflection a ray of light is reflected as several rays of light with less intensity but various directions (see figure C.1, right). Diffuse reflection is dominant for objects with a high surface roughness like a sheet of paper or sand blasted surfaces.

Generally, objects can not clearly be assigned to one of the two reflection behaviors but lie somewhere in between. Some objects have a rather luminous surface and react mainly with specular reflection, whereas objects with a rather dull surface react mainly with a diffuse reflection.

For an object that reacts mainly with specular reflection, the intensity of the reflected light is rather strong but due to its limited direction the object's visibility in the image heavily depends on the angle of incidence the ray of light comes from. To increase the chance that the reflected light hits the camera lense in a way the object is clearly mapped in the image, a diffuse light source is recommended. Then, light waves come from and therefore are reflected to different directions.

For an object that reacts mainly with a diffuse reflection less light is reflected, but, as the light waves are reflected into several directions, the visibility of the object does not depend that much on the exact position of the light source. The following section gives a brief overview of basic types of light sources and the influence of their position in relation to the camera and object.



Figure C.1: The two (extreme) types of reflection: (left) specular reflection, (right) diffuse reflection.

C.1.2 Characteristics of the Light Source

Knowing the characteristics of the object, the light sources and their positions in relation to the object and camera positions have to be selected. To obtain clear-cut edges without disturbing reflections you should not rely on day light but use controlled light. In particular, when taking several images the lighting conditions additionally should not change over time. The characteristics of the lighting can be split into

- the specific type of light source, based on the direction the light waves are propagated to, and
- the spatial relation between light source, object, and camera.

Similar to the reflection properties of object surfaces, light sources can produce light that is limited to specific directions or light that emanates into different directions. We differentiate between

- directed light and
- diffuse light.

Directed light is described by rays of light following a defined direction. This may be a single point light that emanates concentric light when placed near the object and almost parallel light when placed far away from the object (see figure C.2, left), but also a telecentric light for which the rays of light are adjusted into exactly parallel directions using a collimator lense (see figure C.2, middle). As all rays of light come from and are reflected to similar directions, strong shadows and reflections may occur. For non-flat objects a telecentric light may be more suitable because a point light may lead to small perspective distortions. With a telecentric light the 2D outline of the object in the image corresponds to the cross-section of the 3D object and the size of the object in the image is

independent of the distance between the camera and the object. But note that telecentric light is mainly suited for small objects as the light only hits the whole object to be measured if the object is smaller or the same size as the diameter of the lense.

Diffuse light scatters the rays of light, so that an object is lighted from several directions. That way, strong shadows and reflections on the object can be minimized. In figure C.2 the diffuse light is illustrated as a single point light source that is scattered into several rays of light with different directions using a diffuser. In practice, several diffuse light sources are placed at different positions, e.g., in form of a ring light, to disperse the light as much as possible.

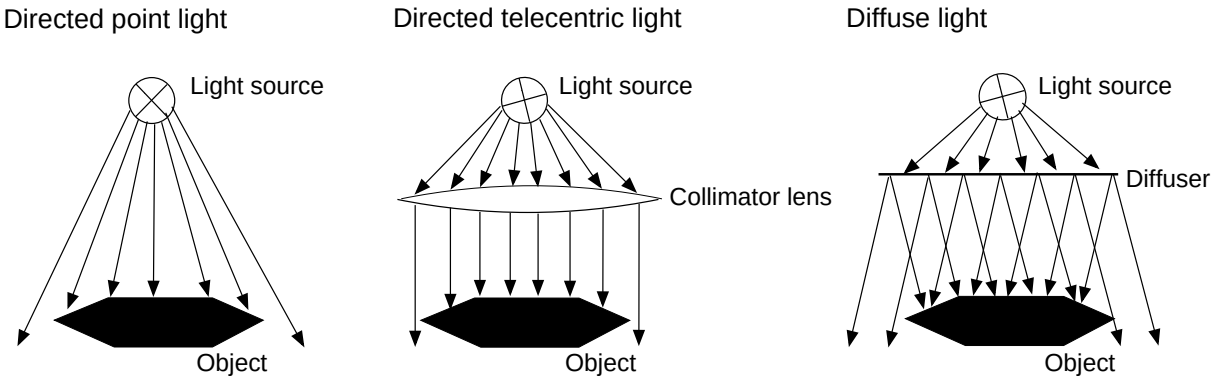

Figure C.2: Directed and diffuse light: (left) point light, (middle) telecentric light, and (right) diffuse light.

Besides the propagation of the light waves seen from the light source, the direction of light seen from the object-camera unit has to be considered for a successful image analysis. Figure C.3 illustrates the different lighting methods. They are coarsely differentiated into

- front light and
- back light.

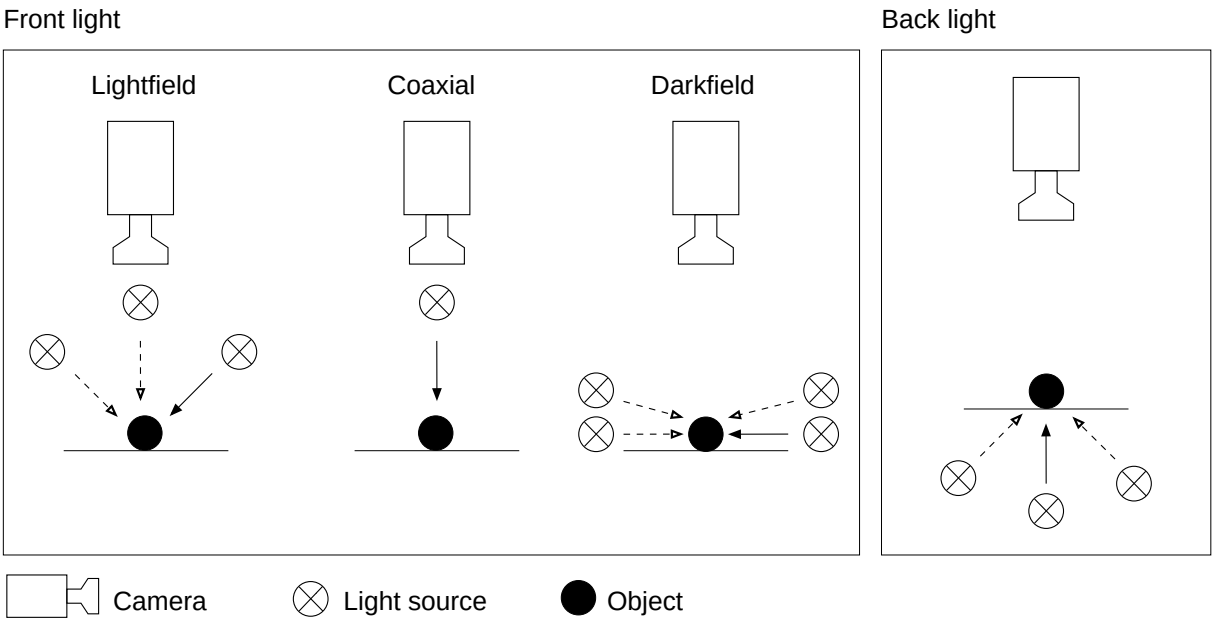

Figure C.3: Light sources differentiated due to their spatial relation to object and camera.

Front light is used for all objects for which the structure of the surface or any components on the surface are of interest, e.g., if scratches in the surface of an object are searched for or if several object parts are to be investigated, e.g., the different components of a board. Front light can be differentiated into

- lightfield lighting (including coaxial lighting) and
- darkfield lighting.

With a lightfield lighting the light approximately hits the object surface in a right angle. A special case of a lightfield lighting is the coaxial lighting, which emanates directly from the direction of the camera lense. The light of a darkfield lighting comes from the side, i.e., it hits the object approximately parallel to its surface. Lightfield lighting is the standard lighting that is used for most applications in machine vision, whereas darkfield lighting is needed to highlight object parts that are not visible when lighted from above, e.g., relief structures in the object's surface.

Back light is used if the outer contour of the object gives the relevant information. The light source is placed behind the object and the object is mapped to the image as a homogeneous dark region against a light background. Opposite to images with widespread gray values, such a 'binary' image is rather easy to process.

Dependent on the object's surface and your specific task, you combine front or back light with a directed or diffuse light source. The list of light sources introduced here does not claim to be complete, but tries to convey to you a first impression on the complexity of the lighting task. To get more information about these and further light sources, e.g., also about polarized light or x-rays, we recommend to read more comprehensive literature with the specific focus on lighting.

C.2 Geometry

The lighting conditions are important to obtain clearly visible objects in the image. To obtain geometrically correct images of the objects of interest, we additionally have to consider the geometrical conditions between the camera and the object of interest during the image acquisition. The geometrical correctness of the object's representation in the image depends on various influences like the used equipment and the geometrical relation between the camera and the object plane. The geometrical distortions with the most influence are lense distortions and perspective distortions. These are described in detail in the Solution Guide III-C, section 3.4 on page 78. There, you also get detailed information about the techniques to compensate both distortions, in particular using camera calibration and a following transformation of either the image, a contour, or a set of image points into world coordinates. The intention of this section is to give you the basic information about the relation between camera and object and thus help you to plan the right camera position for your specific task.

Two main concepts for the relation between the pose (position and orientation) of a camera and the pose of the object are relevant for measuring in an image:

- the orthogonal view and
- the oblique view.

In the orthogonal view the camera looks at the object plane at a right angle (see figure C.4, left). Thus, for a flat object and a normal lense the length of a line's representation in the image corresponds to the length of the corresponding real line multiplied by a unique scale factor. For non-flat objects, due to perspective distortions a normal lense may cause small distortions at the border of the object, dependent also on the position of the object in the image. These distortions can be avoided using a camera with a telecentric lense. In contrast to the telecentric lense used for directing the light rays of a telecentric light source, the telecentric lense of a camera does not send but receive parallel rays of light. But similar to the telecentric light, a telecentric lense in a camera is mainly suited for small objects as the whole object is only mapped completely in the image if the object is smaller or the same size as the diameter of the lense.

The oblique view is used if limited space does not allow for a setup with an orthogonal view. Here, the angle between the camera and the object plane can be arbitrary (see figure C.4, right). The oblique view leads to a perspectively distorted geometry of the image content. Thus, the length of a line in the image can not be translated directly to the length of the real object. A transformation is necessary that reconstructs the geometry of the orthogonal case. The parameters needed for the transformation can be obtained by calibrating the camera (see Solution Guide III-C).

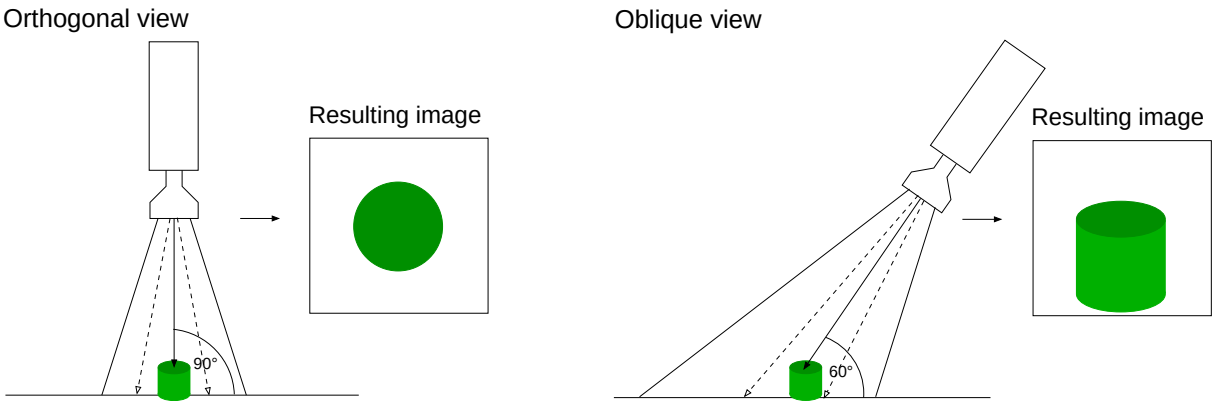

Figure C.4: The two views on a plane: (left) orthogonal view and (right) oblique view.

Index

acquire image in volatile mode, 23
acquire image with asynchronously resettable camera, 23, 27
acquire image(s), 21
acquire image(s) continuously, 26
acquire image(s) from multiple cameras simultaneously, 31
acquire image(s) in real time, 24
acquire image(s) with external trigger, 28

back lighting, 50

callback function, 38
channel, 43
coaxial lighting, 50
connect to multiple image acquisition boards, 13
connect to multiple image acquisition ports, 13
connect to single camera, 13

darkfield lighting, 50
diffuse lighting, 50
diffuse reflection, 49
directed lighting, 50
domain (ROI), 43

error handling for image acquisition, 35

front lighting, 50

grab image arrays or preprocessed image data, 35

image, 43
image acquisition interface, 7
image array, 44
image size, 47

lightfield lighting, 50
lighting (illumination), 49

non-real-time image acquisition, 21

open image acquisition device, 11
open image acquisition device for port switching, 13
open image acquisition device for simultaneous grabbing, 14

pixel data, 48
pixel type, 43

real-time image acquisition, 21

specular reflection, 49

unsupported image acquisition device, 34
use line scan camera, 39
use standardized image acquisition interfaces, 33